S.O. #: 042474

INSTRUMENTATION SHUTDOWN VALVES

MANUFACTURER - ROTORK (ACTUATOR)
MODEL - R SERIES
SHUTDOWN VALVES

TAG # REFERENCE

SDV-3450A
SDV-3450B
SDV-3451A
SDV-3451B
XV-3211
XV-3216

COOPER CAMERON VALVES

OPERATION AND MAINTENANCE MANUAL

NUTRON BALL VALVE

MODEL B2

1 ½" FP – 6" RP 150# - 600#

6" FP – 10" RP 150#, 300#

For technical questions, please contact the following:
Engineering Department
2125 - 64 Avenue
Edmonton, Alberta, Canada
T6P 1Z4
Phone: (780) 468-2732
Fax: (780) 450-1359

OPERATION

The Nutron Model B2 ball valve is a floating ball, quarter turn valve designed for shut off service. The ball valve construction is a two piece bolted non-welded design. The handle direction corresponds with the valve position. When the handle is inline with the body, the valve is open and if at a right angle to the body, the valve is closed. The valve should be operated until the cap screw head or gland flange nubbin limits the handle's movement. Operating the valve in a partially open or partially closed position will damage and/or shorten the life of the valve seats.

Due to the critical nature of pressurized piping systems it is recommended that the compatibility to the service of the metallic and non-metallic components be confirmed prior to installation.

CAUTION

READ CAREFULLY BEFORE INSTALLING OR OPERATING THE VALVE

Hazards are inherent with the construction, operation and maintenance of high pressure piping systems. The following information and precautions are provided to minimize these hazards:

1. *The valve's nameplate indicates maximum operating pressure, as well as minimum and maximum operating temperatures. The valve may be safely operated within these limits.*
2. *The valve's end connections are provided in accordance with ASME flanged end or threaded end requirements.*
3. *B2 valves are firesafe, and are in accordance with API 607 requirements.*
4. *The valve has been factory pressure tested based on the nameplate maximum operating pressure.*
5. *The valves may be lifted using slings. Fittings and other devices, which may be attached to the valve, are not intended to be used as lifting points. Always follow local safety regulations when lifting heavy valves.*
6. *Nutron valves are designed, manufactured and tested under a certified quality system. Only quality parts and materials are used in the assembly of Nutron valves. Pressure containing components are suitable for the minimum temperature marked on the nameplate. Factory certification is available.*
7. *If the valve, in service, is exposed to hazards such as traffic, wind or earthquake loading contact the factory, if it is necessary, to confirm that the valve design is suitable for the application. The factory requires a complete description of the hazard before making any recommendations.*
8. *If the valve, in service, is exposed to hazards such as excessive piping system reaction forces and moments contact the factory, if it is necessary, to confirm that the valve design is suitable for the application. The factory requires a complete description of the hazard before making any recommendations.*
9. *If the valve, in service, is exposed to hazards such as corrosive or abrasive fluids or atmospheric conditions contact the factory, if it is necessary, to confirm that the valve design is suitable for the application. The factory requires a complete description of the hazard before making any recommendations.*
10. *The valve has been designed and manufactured so that under normal operation conditions hazards such as material fatigue, brittle fracture, creep rupture or buckling will not occur. Do not operate the valve beyond the pressures and temperatures marked on the nameplate. The factory requires a complete description of the hazard before making any recommendations.*

11. *The user is responsible for minimizing other hazards associated with the construction, operation and maintenance of high pressure piping systems, such as:*
    a. *Possibility of decomposition of unstable fluids*
    b. *Provisions for the release or blow off of pressure*
    c. *Prevention of physical access to system under pressure*
    d. *Prevention of physical access to surfaces at extreme temperature*
    e. *Provisions for inspection*
    f. *Provisions for draining and venting*
    g. *Provisions for filling*
    h. *Provision for equipment access*
    i. *Prevention of over-pressurization, over-heating and over-filling*
    j. *Provision for fault indication*
12. *The user is responsible for meeting applicable local safety regulations.*

INSTALLATION

All valves are shipped in the open position with protective covers on the end connections to prevent contaminants from entering the valve cavity and potentially damaging the ball or resilient seat surfaces during storage. The covers should be repaired or replaced if damaged and not removed until the valve is to be installed.

For handling the valve, proper slings and rigging procedures must be used. Attached fittings, gearboxes, actuators, handles and pipe handles are not to be used as lifting points. The valves should be rigged such that the slings safely clear all fittings, gearboxes, actuators, handles and pipe handles.

When installing the valve, it must remain in the fully open position to protect the seal surfaces of the ball from damage. Leave the valve in the open position and do not operate until the line has been thoroughly cleaned and flushed. Valves which need to be positioned either fully opened or fully closed can be locked in place with optional locking device.

The valve may be installed with flow in either direction. It may be positioned horizontally, vertically, or at a gradient without impairing the operation of the valve.

Valves installed at the end of a line require that all appropriate and necessary safety practices be followed.

For actuated valves, please refer to the actuator manufacturer's specifications for the valve's orientation to ensure optimal performance.

If system hydrostatic tests are to be performed at pressures exceeding the rated working pressure of the valve, the ball should be left in the partially opened position. This prevents seats from experiencing these pressures while the body cavity can accept up to 150% rated working pressure.

After pressure tests, with the valve in the half open position and all test pressure relieved, the body cavity should be completely drained via the attached piping system to prevent corrosion. The valve may then be placed in the required operating position.

Flanged Connections
Care must be taken not to damage the flange seal faces and that they are clean for assembly. The end-user must provide gaskets and mating flanges of equal ratings to that of the valve for proper installation. When bolting the flanges together, bolt threads should be lubricated to obtain maximum loading on the bolts. The bolts should be tightened using a criss-cross pattern for even loading. When ring type joints are supplied the ring number is marked on the rim of the RTJ flange.

MAINTENANCE

CAUTION: *Safety practices for pressurized equipment must be followed and address hazards inherent in pressurized systems. Extreme caution and safety procedures are to be exercised whenever a valve, or fitting in a valve, are serviced or maintained.*
The valve requires no periodic maintenance. If the valve leaks by the stem seal (Key 9), tighten both cap screws equally (Key 14) to re-compress the stem packing.

Note: No special tools are required to disassemble or reassemble the valve.

DISASSEMBLY

1. ***CAUTION:*** *Before removal from the line and before disassembly isolate the valve from line pressure. With the valve in the half open position ensure all pressure is bled from the valve body via the attached piping system.*
2. *Place the valve in the closed position. Mark the adapter (Key 2) to body (Key 1) flanged connection, and if applicable the valve operator to valve connection, to indicate correct orientation of these components for reassembly.*
3. *Remove the valve operator or actuator from the valve or, for lever operated valves, remove the handle capscrew (Key 22), washer (Key 21), handle (Key 20), and with pipe style handle the stem key (Key 22).*
4. *Secure the ball valve in a vertical position with the body (Key 1) orientated downward.*
5. *Remove the nuts (Key 15) from the studs (Key 16). Loosen and remove the nuts in a crossing pattern.*
6. *Remove the adapter (Key 2) off of the body (Key 1) being careful not to allow the seat (Key 5) to fall and become damaged.*
7. *Lift the ball (Key 4) out of the body, being careful not to damage surfaces.*
8. *Remove the two seats (Key 5) from the body (Key 1) and adapter (Key 2) being careful not to damage surfaces.*
9. *Remove the packing gland (Key 13) and capscrews.*
10. *Push the stem (Key 3) down and lift out of the body, being careful not to damage surfaces. Remove the spring (Key 17) and thrust bearing (Key 8) from the stem. Remove the packing ring (Key 9).*
11. *Clean and inspect all components for wear and/or damage.*
    - *~ replace ball if it has nicks, pits, or scars in the sealing areas or if damage has occurred where the stem inserts into the ball.*
    - *~ replace seats or packing ring if there are nicks, cuts or deformation of the sealing surface.*
    - *~ remove all o-rings and replace if broken, nicked, stretched, swollen, hard, brittle or sticky.*
    - *~remove the braided rope and replace if frayed or damaged.*

ASSEMBLY

1. *Assure all components for assembly are clean of dirt and contaminants.*
2. *Install all o-rings onto mating components.* ***Important:*** *When installing components, apply a compatible light grease to the o-ring or braided rope, the leading edge of component, and it's mating bore.*

   Adapter (Key 2): o-ring (Key 6) and braided rope (Key 18)
   Stem (Key 3): o-ring (Key 7)

   For stem (Key 3) install thrust washer (Key 8) first and then o-ring (Key 7).
   For braided rope (Key 18) cut the ends so that installed they overlap.
3. *Place the body (Key 1) vertically with the flanged end down.*
4. *Apply compatible grease to the internal counterbores of body (Key 1) and adapter (Key 2) where seat (Key 5) locates. Caution: Before applying grease, assure bores are clean, and free of damage.*
5. *Apply compatible grease to the thrust bearing (Key 8) and install into the body (Key 1) internal stem bore.*
6. *Install spring (Key 17) into the hole in the stem (Key 3).*
7. *Apply compatible grease to the stem (Key 3) and install through the body (Key 1) internal stem bore. Position the stem in what would be the fully closed position.*
8. *Apply compatible grease to the seats (Key 5) and install into the body (Key 1) and adapter (Key 2) counterbores.*
9. *Install the ball (Key 4) into the body carefully engaging the bottom of the stem (Key 3), finally resting the ball against the seat. Important: Before installing the ball ensure the seat and ball surfaces are clean, and free of damage.*
10. *Attach adapter (Key 2) to the body (Key 1). Align the markings previously made during disassembly to assure that the bolt holes of the end connection straddle the common centerline of valve. Fully tighten nuts in a crossing pattern.*
11. *Apply compatible grease to the packing ring (Key 9) and packing follower (Key 12). Install over the stem (Key 3) and into body (Key 1).*
12. *Install the packing gland (Key 13) over the stem. Install capscrews (Key 14) and tighten.*
13. *Install wave spring washer (Key 19) followed by the stop plate (Key 10) over the stem. The stop plate is held in place by the snap ring (Key 11).*
14. *Install the lever, or valve operator with markings previously made re-aligned.*
15. *Assure valve operates properly and leave in the fully open position.*
16. *Valve should be tested to the appropriate specifications.*

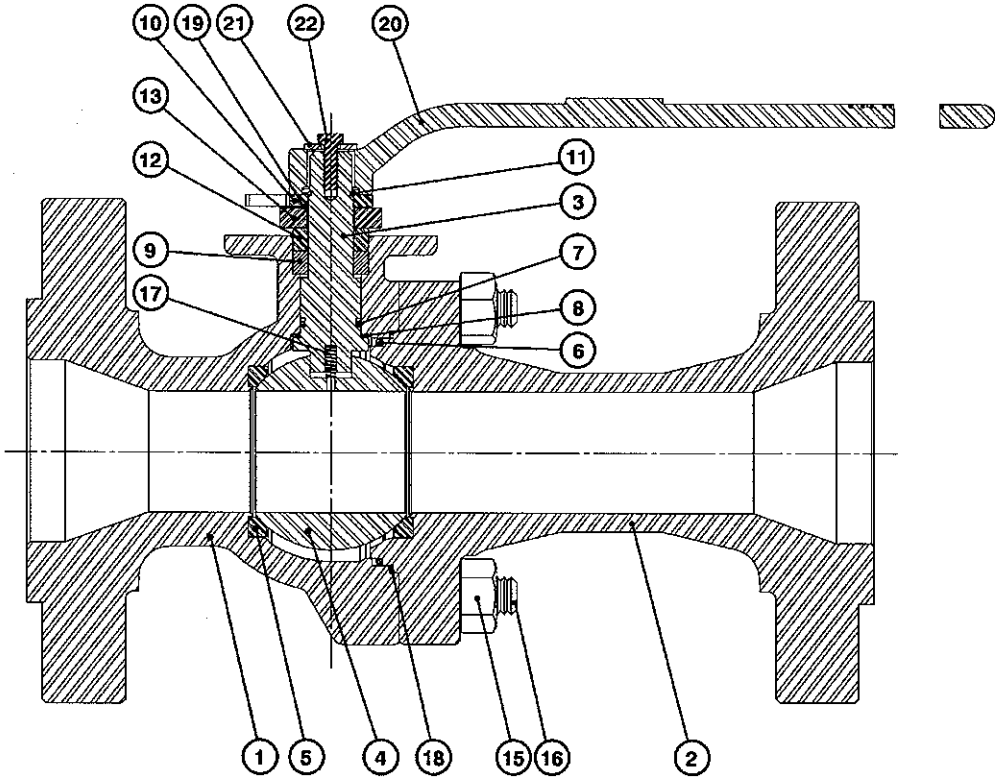

Nutron – B2 Ball Valve

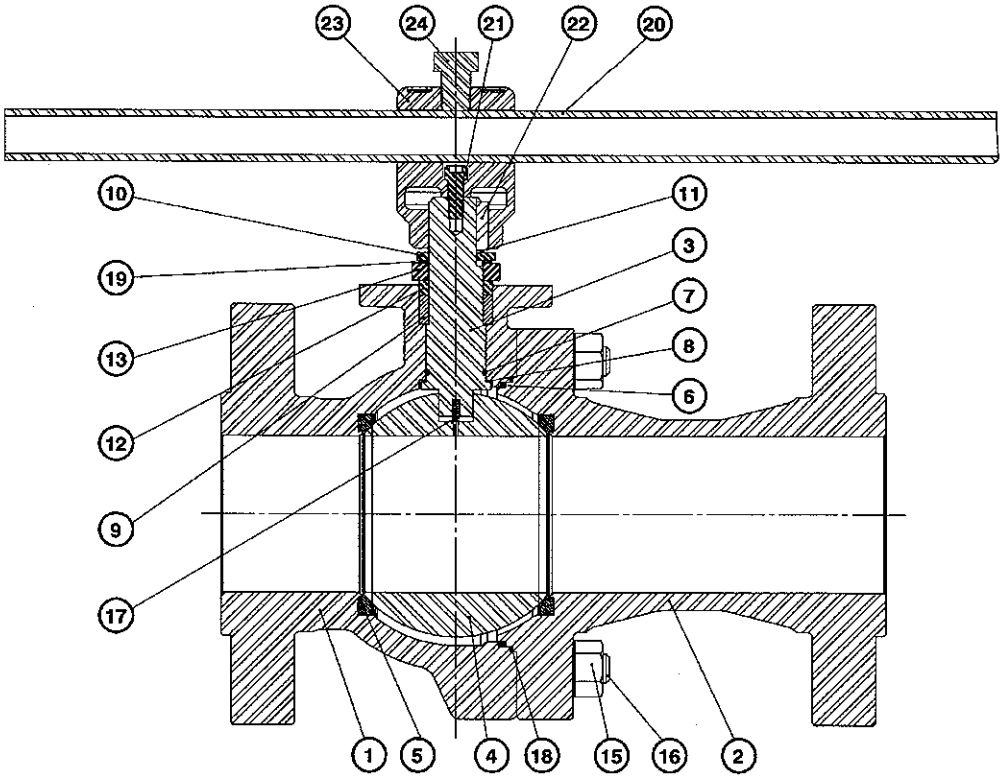

FOR XV-3211 & XV-3216
VALVE BODY INFORMATON,
SEE ESDV SECTION
(FCC BALL VALVES)

rotork®
fluid system

R RANGE

RACK AND PINION ACTUATORS

INSTALLATION AND MAINTENANCE MANUAL

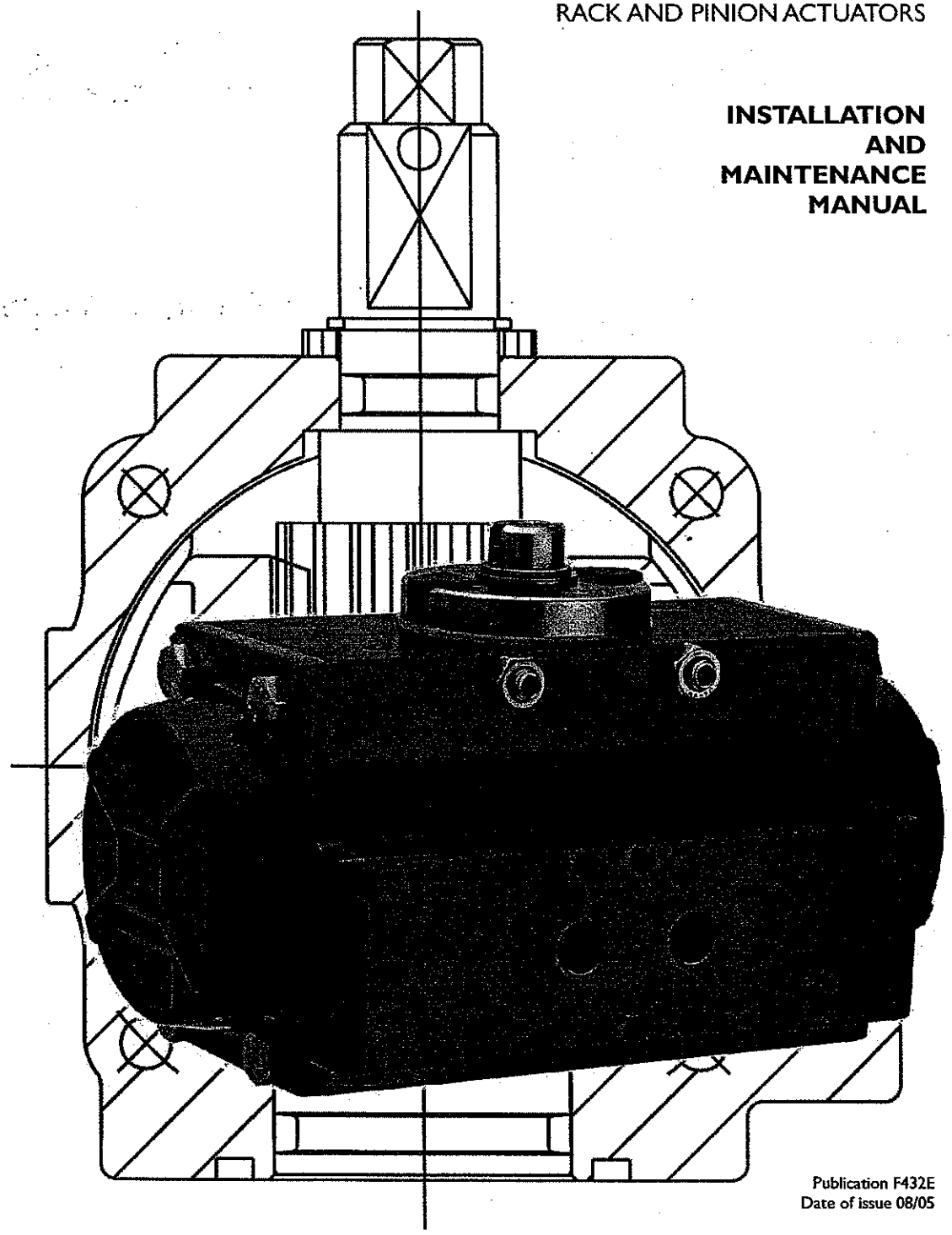

Publication F432E
Date of issue 08/05

SECTION	CONTENT	PAGE
1	Introduction	3
2	Installation	3
3	Operation	4
4	Travel Stop Adjustment	5
5	Maintenance	6
6	Grease Specification	6
7	Disassembly	7
8	Assembly	8
9	Fault Detection	10
9	Drawing / Parts List - Models 52-125	11
10	Drawing / Parts List - Models 160-270	12

1.0 Introduction

1.1 The robust design features of Rotork R Range actuators include a hard anodized body, powder coated end caps, and stainless steel and nickel plated hardware. Because of our commitment to quality, every actuator is functionally tested under pressure. They are lubricated for life which can be expected to be in excess of 1,000,000 cycles under normal working conditions.

1.2 The condition of the air supply to the actuator will effect its efficiency and life. The longest service life can be obtained through the use of clean, dry air.

1.3 The use of Viton seals and high temperature lubricant in our standard build yields an actuator suitable for operating in environments ranging from -20° C to 150° C (-4° F to 300° F).

1.4 Maximum air supply pressure is 8 bar (116 psi).

1.5 Further details available in publication F401E.

INSTALLATION R RANGE

2.0 Installation Instructions

2.1 It is recommended when mounting the actuator, care is taken to determine the position of the valve. The actuator must be properly oriented with respect to the valve, and gas supplied to a specific port, to provide the required direction of rotation.

2.2 After the actuator has been mounted to the valve, the position of the stop bolts should be checked, and adjusted if necessary, to ensure full opening and closing of the valve. Some valves incorporate their own stops. In this case, it is recommended the actuator stops be adjusted to coincide with those of the valve.

2.3 Port connections are 1/8" NPT for models 52-85 and 1/4" NPT for models 100-270. Valve mounting flanges conform to ISO standards. Accessory mounting flanges are standard NAMUR pattern. See Rotork publication F401E for detailed dimensional information.

3.0 Operation

3.1 Double Acting

On double acting actuators, pressurizing port P1 generates force on the outboard side of both pistons. In the standard build configuration this will yield a clockwise rotation of the output shaft when viewed from the top side of the pinion. Venting is then through port P2.

Pressurizing Port P2 generates force on the inboard side of both pistons. In the standard build configuration this will yield a counter-clockwise rotation of the output shaft when viewed from the topside of the pinion. Venting is then through port P1.

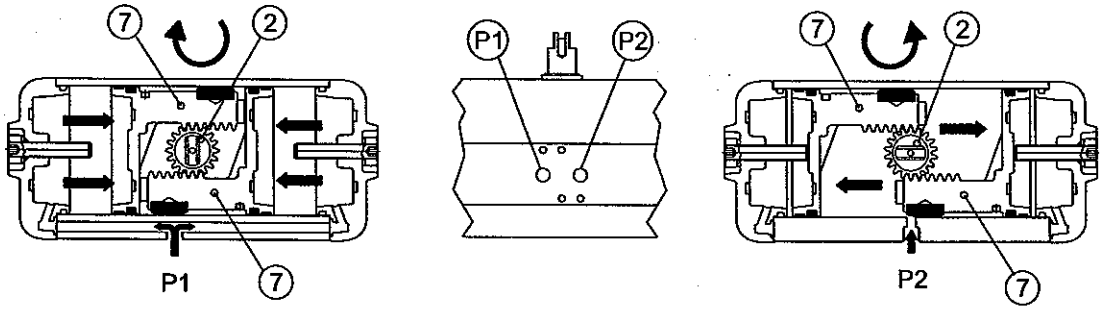

3.2 Spring Return

On spring return actuators port P2 is pressurized to yield the air stroke. In the standard build configuration this will yield a counter-clockwise rotation of the pinion when viewed from the top side of the pinion.

De-pressurizing port P2 allows spring force to push the pistons inward. In the standard build configuration this will yield a clockwise rotation of the output shaft when viewed from the top side of the pinion. Port P1 feeds the spring chambers and is not to be pressurized.

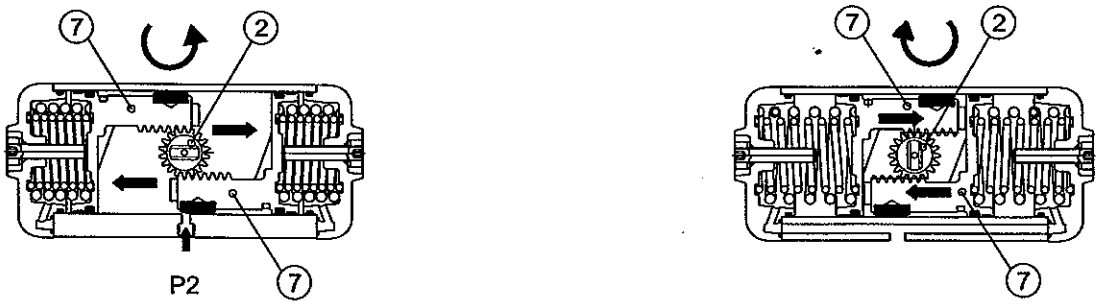

3.2.1 Spring Setting

Modification of the spring set may be necessary to meet the torque requirements and operational characteristics of your valve application. Consult the charts below to determine the configuration of each spring set. See Rotork publication F401E for torque output data.

RSR52 - RSR125 Spring Compliment		
Set	Internal	External
01	1	1
02	-	2
03	2	1
04	1	2
05	2	2

RSR160 - RSR200 Spring Compliment			
Set	Internal	Central	External
01	-	2	-
02	-	-	2
03	-	2	1
04	2	-	2
05	-	2	2
06	2	2	2

RSR270 Spring Compliment	
Set	Per Side
01	2/3
02	3/3
03	3/4
04	4/4
05	4/5
06	5/5
07	5/6
08	6/6

4.0 Travel Adjustment

4.1 Adjustment of models 52-125
Rotation is 90° with adjustability of +/- 5°in both directions. Stop bolts threaded through the actuator body act upon a cam mounted to the pinion shaft.

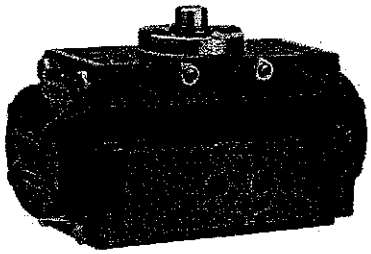

4.2 Adjustment of models 32,160,200,270
Rotation is 90° with adjustability of +/- 5°. Stop bolts threaded through each end cap act upon the piston faces limiting piston travel in the outboard direction only.

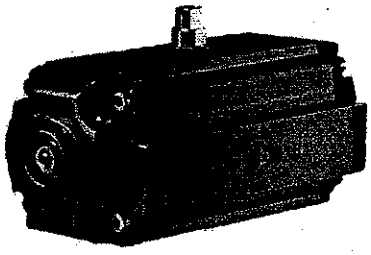

4.2.1 For models 160 - 270, an optional, externally mounted stop is available to limit inward piston travel +/- 5°. A single stop bolt is threaded through the housing and acts upon lobes on the pinion shaft extension.

Note: Damage may result if the stop bolt is placed in the incorrect hole.

4.2.2 If the actuator has been assembled so that inboard travel of the pistons results in clockwise rotation of the pinion when viewed from the top, the bolt should be inserted in the right hand hole as shown below.

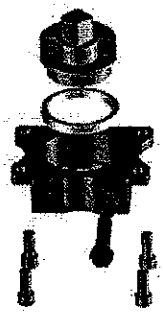

4.2.3 If the actuator has been assembled so that inboard travel of the pistons results in counter-clockwise rotation of the pinion when viewed from the top, the bolt should be inserted in the left hand hole.

5.0 Maintenance

Rotork R Range actuators are designed to be maintenance free and are lubricated for the life of the assembly. A minimum of 1,000,000 cycles can be expected under normal working conditions. They are designed to work for long periods in the most severe conditions, however, a preventative approach to maintenance helps prevent costly downtime and can actually reduce the cost of ownership. Rotork can provide an actuator maintenance contract tailored to meet each customers individual requirements.

Rebuild kits containing guides and seals are available. It is worth noting, that particularly on the smaller sizes, with consideration of the labor and down time required, replacing the entire actuator may be a more cost effective solution.

5.1 Periodic Inspection

5.1.1 Ensure that the actuator correctly operates the valve within the required cycle time. The actuator should be cycled several times with all the existing controls such as remote control, local control and manual override; particularly if the actuator is not frequently operated.

5.1.2 Verify that the power gas supply pressure value is within the required range.

5.1.3 Visually inspect external components of the actuator for physical damage.

5.1.4 Check pneumatic connections for leakage. Tighten pipe fittings as required.

5.1.5 Inspect actuator paint work for damaged to ensure continued corrosion protection. Touch-up to applicable paint specification as required.

GREASE SPECIFICATION

6.0 Grease Specification

The actuator is lubricated for the life of the assembly under normal operating conditions. The following grease is recommended for any re-lubrication:

Manufacturer:	Mobil
Trade name:	Exxon N2
Consistency: (NLGI GRADE)-ASTM D217:	2
Worked penetration at 25°C-ASTM D217:	280 dmm
Dropping point - ASTM D2265	280°C
Viscosity of base oil at 40°C-ASTM D445:	110 cSt
Viscosity of base oil at 100°C-ASTM D445:	12 cSt
Minimum dispensing temperature:	-10°C

7.0 Disassembly

7.1 Disassembly models 52-125

7.1.1 Disconnect all pneumatic and electrical supplies from the actuator.

7.1.2 Remove accessories from the actuator.

7.1.3 Remove the actuator from the valve.

7.1.4 Place the actuator on a stable support.

7.1.5 Remove the end cap retaining screws (22) from each end cap (19, 20). **To avoid damage on spring return units, it is imperative to loosen the screws a little at a time, alternating between them.** All spring force will be safely released before the screws are disengaged.

7.1.6 Remove the end caps (19, 20).

7.1.7 Remove the pinion snap ring (10).

7.1.8 Remove the spacer ring (6).

7.1.9 Rotate the pinion (2) counter-clockwise in respect to the body (1). This will push the pistons (11) outward disengaging them from the pinion (2).

7.1.10 Remove the pistons (11) from the body (1). Do not pry at the edge of the pistons as seal damage may result. Instead, pull on the raised center portion of the piston (7) with pliers or a similar tool.

7.1.11 Remove the pinion (2) from the body (1).

7.2 Disassembly models 160, 200, 270

7.2.1 Disconnect all pneumatic and electrical supplies from the actuator.

7.2.2 Remove accessories from the actuator.

7.2.3 Remove the actuator from the valve.

7.2.4 Place the actuator on a stable support.

7.2.5 Remove the end cap retaining screws (20) from each end cap (18, 19). **To avoid damage on spring return units, it is imperative to loosen the screws a little at a time, alternating between them.** All spring force will be safely released before the screws are disengaged.
Note: A press to compress the springs and relieve force on the retaining screws is recommended on sizes 160 and larger.

7.2.6 Rotate the pinion (2) counter-clockwise in respect to the body (1). This will push the pistons (7) outward against the stop bolts (14) disengaging the end caps (18, 19) from the body (1) and the pistons (7) from the pinion (2).

7.2.7 Remove the pistons (7) from the body (1). Do not pry at the edge of the pistons as seal damage may result. Instead, pull on the raised center portion of the piston (7) with pliers or a similar tool.

7.2.8 Remove the pinion snap ring (6).

7.2.9 Remove the spacer ring (5).

7.2.10 Remove the pinion (2) from the body (1).

8.0 Assembly

8.1 Assembly model 52-125

8.1.1 Ensure all parts are clean before proceeding.

8.1.2 Lightly coat the bore area of the body, all seals and their mating surfaces, and the rack and pinion gear teeth with Exxon Unirex N2 or equivalent.

8.1.3 Insert the pinion (2) into the body (1). Orient the pinion so that the flats of the double 'D' on the top of the pinion are parallel to the bore axis.

8.1.4 Place the actuator on a stable support.

8.1.5 In the standard build configuration spring stroke/inward piston travel generates a clockwise rotation of the output shaft when viewed from the top (double 'D') side of the pinion. Alternatively, the actuator can be assembled so the spring stroke/inward piston travel will generate a counter-clockwise rotation of the output shaft. The piston/pinion orientation to determine direction of rotation is shown below.

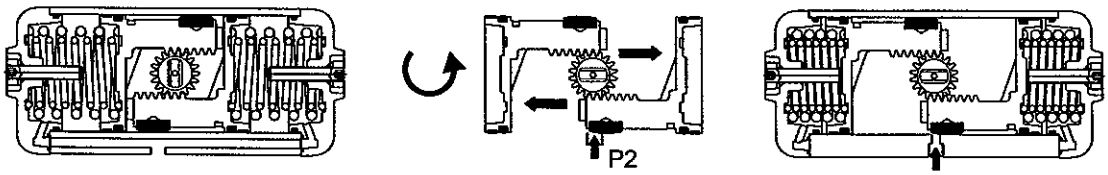

STANDARD CONFIGURATION

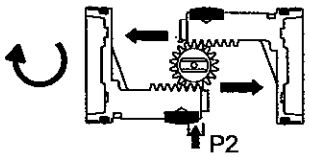

ALTERNATE CONFIGURATION

Slowly insert the pistons (11) into the body (1) from either end until the rack teeth engage the teeth of the pinion (2).

8.1.6 Rotate the pinion (2) 90° clockwise with respect to the body (1), or 90° counter-clockwise for the alternative configuration.

8.1.7 Confirm proper assembly by measuring the pistons are equidistant from the ends of the body.

8.1.8 On the top of the pinion, assemble the cam (6), spacer (7), washer (9) and snap ring (10).
Note: The snap ring required must be DIN471 - UNI7436.

8.1.9 Insert the travel stop bolts (16) into the body (1) and screw on the nuts (15).

8.1.10 For double acting actuators, mount the end caps (19, 20) with end cap retaining screws (22).

8.1.11 For spring return actuators, rotate the pinion (2) so that the pistons (11) are in the most inboard position. Insert the spring sets into the body (1) and onto the seats on the ends on the pistons (11).

8.1.12 Mount the end caps (19, 20) with end cap retaining screws (22). **To avoid damage, it is imperative to tighten the screws a little at a time, alternating between them.**

8.2 Assembly models 160, 200, 270

8.2.1 Ensure all parts are clean before proceeding.

8.2.2 Lightly coat the bore area of the body, all seals and their mating surfaces, and the rack and pinion gear teeth with Exxon Unirex N2 or equivalent.

8.2.3 Insert the pinion (2) into the body (1). Orient the pinion so that the flats of the double 'D' on the top of the pinion are parallel to the bore axis.

8.2.4 Place the actuator on a stable support.

8.2.5 Secure the pinion with spacer ring (5) and pinion snap ring (6).
Note: Make sure the snap ring is properly seated in the groove or damage to the pistons and or pinion may result.

8.2.6 In the standard build configuration the spring stroke/inward piston travel generates a clockwise rotation of the output shaft when viewed from the top (double 'D') side of the pinion. Alternatively, the actuator can be assembled so the spring stroke/inward piston travel will generate a counter-clockwise rotation of the output shaft. The piston/pinion orientation to determine direction of rotation is shown below.

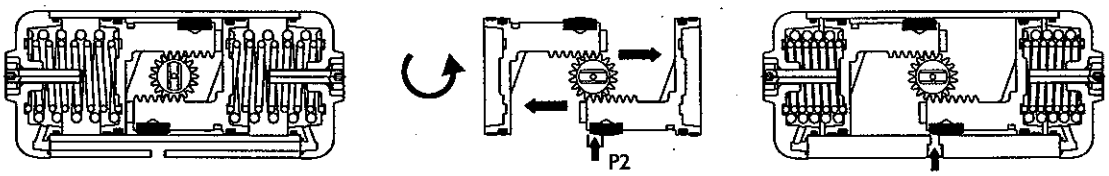

STANDARD CONFIGURATION

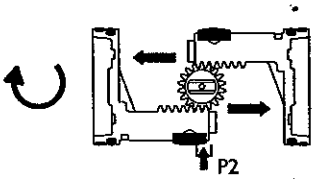

ALTERNATE CONFIGURATION

Slowly insert the pistons (7) into the body (1) from either end until the rack teeth come into contact with the teeth of the pinion (2). When the pistons are flush with the end of the body, the pinion flats must be parallel to the bore axis.

8.2.7 Rotate the pinion (2) 90° clockwise with respect to the body (1), or 90° counter-clockwise for the alternative configuration.

8.2.8 Confirm proper assembly by measuring the pistons are equidistant from the ends of the body and the flats of the pinion are now perpendicular to the bore axis.

8.2.9 For double acting actuators, mount the end caps (18, 19) with end cap retaining screws (20).

8.2.10 For spring return actuators, rotate the pinion (2) so that the pistons (7) are in the most inboard position. Insert the spring sets into the body (1) and onto the seats on the ends on the pistons (7). Mount the end caps (18, 19) with end cap retaining screws (20). **To avoid damage, it is imperative to tighten the screws a little at a time, alternating between them.**
Note: A press to compress the springs is recommended on actuator sizes 160 and larger.

9.0 Fault Detection

In the unlikely event of a fault developing, the following Fault Location table is provided to assist the maintenance technician. This Fault Location Table is designed to cover as wide a range of Rotork Fluid System actuators as possible. Reference to equipment not supplied should be ignored.

SYMPTOM	CAUSE	REMEDY
9.1 Erratic movement	9.1.1 Irregular supply of operating medium.	9.1.1.1 Check operating medium for consistent supply pressure and correct as necessary.
	9.1.2 Inadequate lubrication.	9.1.2.1 Dismantle, re-lubricate and reassemble.
	9.1.3 Worn parts	9.1.3.1 Dismantle. Visually inspect for significant wear. Actuator replacement may be required.
	9.1.4 Defective valve.	9.1.4.1 Consult the valve manufacturer's documentation.
9.2 Short stroke	9.2.1 Incorrectly set stops (valve and /or actuator).	9.2.1.1 Check the position of the travel stops and readjust as necessary.
	9.2.2 Hardened grease.	9.2.2.1 Dismantle, remove any hard grease, re-lubricate and reassemble.
	9.2.3 Debris left in the cylinder or housing during maintenance.	9.2.3.1 Disassemble cylinder assembly to remove debris. Reassemble cylinder assemble as necessary.
	9.2.4 Defective valve.	9.2.4.1 Consult the valve manufacturer's documentation.
9.3 Apparent lack of power	9.3.1 Inadequate supply pressure.	9.3.1.1 Ensure supply pressure is above the minimum operating pressure of the actuator and that output torque produced at supply pressure exceeds valve torque demand.
	9.3.2 Incorrect speed control settings.	9.3.2.1 Adjust speed controls to increase flow.
	9.3.3 Exhaust port blocked.	9.3.3.1 Remove and clean the exhaust port silencers and replace.
	9.3.4 Pipe work blocked, crushed or leaking.	9.3.4.1 Examine the pipe work for blockages, crushed pipe or leakage. Clear or replace as necessary.
	9.3.5 Defective controls.	9.3.5.1 Examine the controls, refurbish or renew as necessary. Refer to component manufacturer's documentation.
	9.3.6 Defective piston seal.	9.3.6.1 Dismantle the cylinder assembly, remove the defective piston seal. Fit new seal and reassemble.
	9.3.7 Defective rod seal.	9.3.7.1 Dismantle the cylinder assembly, remove the defective rod seal. Fit new seal and reassemble.
	9.3.8 High valve torque or valve seized.	9.3.8.1 Consult the valve manufacturers documentation.
		9.3.8.2 Remove the actuator from the valve (see 5.2.6.1 above).

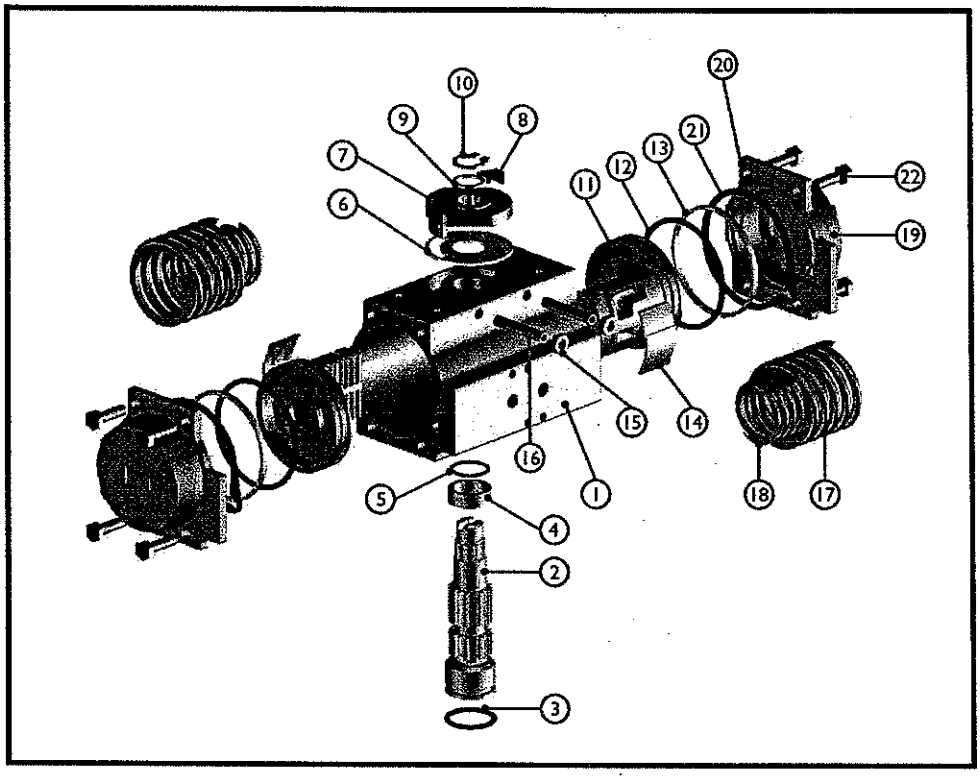

ITEM	DESCRIPTION	MATERIAL	QTY
1	Body	Extruded Aluminum UNS 6060	1
2	Pinion	Nickel-Plated Steel	1
● 3	Lower Pinion O-Ring	Viton	1
▲ 4	Pinion Spacer Ring	POM	1
● 5	Upper Pinion O-Ring	Viton	1
▲ 6	Cam Spacer Ring	POM	1
7	Cam	Stainless Steel	1
8	Position Indicator	Nylon	1
9	Pinion Washer	Stainless Steel	1
▲● 10	Pinion Retaining Ring	Steel	1
11	Piston	Die Cast Aluminum	2
● 12	Piston O-Ring	Viton	2
▲ 13	Anti-friction Ring	POM	2
14	Piston Thrust Block	POM	2
▲ 15	Stop Bolt Retaining Nut	Stainless Steel	2
16	Stop Bolt	Stainless Steel	2
17	External Spring	Steel	■
18	Internal Spring	Steel	■
19	Left End Cap	Die Cast Aluminum	1
20	Right End Cap	Die Cast Aluminum	1
● 21	End Cap O-Ring	Viton	2
22	End Cap Retaining Screw	Stainless Steel	8

■ Applicable for spring return units only. Quantity varies based on torque requirement.
● Included in seal kit.
▲ Included in guide kit.

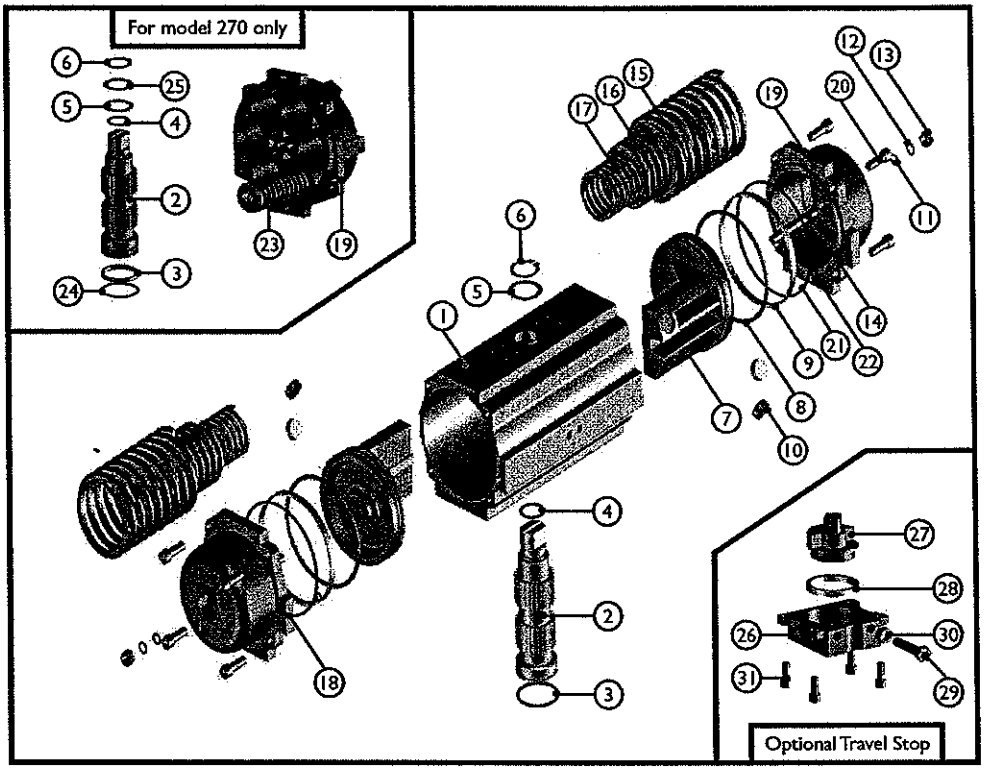

ITEM	DESCRIPTION	MATERIAL	QTY
1	Body	Extruded Aluminum	1
2	Pinion	Nickel Plated Steel	1
● 3	Lower Pinion O-Ring	Viton	1
● 4	Upper Pinion O-Ring	Viton	1
▲ 5	Pinion Spacer Ring	PTFE 15% Graphite	1
▲● 6	Pinion Snap Ring	Nickel Plated Steel	1
7	Piston	Die Cast Aluminum	2
● 8	Piston O-Ring	Viton	2
▲ 9	Anti-Friction Ring	PTFE 15% Graphite	2
▲ 10	Piston Thrust Block	PTFE 15% Graphite	4 6*
11	Stop Bolt O-Ring	Viton	2
12	Stop Bolt Washer	Stainless Steel A2	2
13	Stop Bolt Retaining Nut	Stainless Steel A2	2
14	Stop Bolt	Stainless Steel A2	2
15	External Spring	Steel Zinc Phosphated	■
16	Central Spring	Steel Zinc Phosphated	■

ITEM	DESCRIPTION	MATERIAL	QTY
17	Internal Spring	Steel Zinc Phosphated	■
18	Left End Cap	Die Cast Aluminum	1
19	Right End Cap	Die Cast Aluminum	1
20	End Cap Retaining Screw	Stainless Steel A2	8 12*
● 21	End Cap O-Ring	Viton	2
22	Supply Passage O-Ring	Viton	2
23*	Spring	Steel Zinc Phosphated	Varies
24*	Anti-friction Ring	PTFE 15% Graphite	1
25*	Pinion Washer	Stainless Steel A2	1
	OPTIONAL INWARD PISTON TRAVEL ADJUSTMENT		
26	Housing	Ductile Iron	1
27	Coupling	Nickel-Plated Steel	1
28	Anti-friction Ring	PTFE	1
29	Stop Bolt	Steel	1
30	Stop Bolt Retaining Nut	Stainless Steel	1
31	Mounting Bolt	Stainless Steel	4

■ Applicable for spring return units only. Quantity varies based on torque requirement.
● Included in seal kit.
▲ Included in guide kit.
* Valid for model 270 only.

rotork®
fluid system

Rotork Fluid System *Centres of Excellence*

Rotork Fluid System
Fluid System s.r.l.
Via di Casalino 6
55012 Tasignano - Lucca
Italy
Tel: +39 0583 93061
Fax: +39 0583 934612
Email: fluid@fluidsystem.com

Rotork Fluid System
Exeeco, Ltd.
Regina House, Ring Road
Bramley, Leeds LS13 4ET
UK
Tel: +44 113 236 3312
Fax: +44 113 236 3310
Email: sales@rotorkfluidsystem.co.uk

Rotork Fluid System
Rotork Controls, Inc.
9777 West Gulf Bank
Suite 15A
Houston, Texas 77040
USA
Tel: +1 713 856 5640
Fax: +1 713 856 8127
Email: info@rotork.com

Rotork Fluid System
Rotork Controls (Canada) Ltd.
2850 Argentia Road, Unit #4
Mississauga, Ontario L5N 8G4
Canada
Tel: +1 905 363 0313
Fax: +1 905 363 0320
Email: info@rotork.ca

Rotork Fluid System
Rotork Controls, Inc.
675 Mile Crossing Blvd.
Rochester, New York 14624
USA
Tel: +1 585 328 1550
Fax: +1 585 328 5848
Email: info@rotork.com

Rotork Fluid System
Rotork Controls (Singapore) Pts Ltd.
426 Tagore Industrial Avenue
Singapore 787808
Singapore
Tel: + 65 6457 1233
Fax: + 65 6457 6011
Email: mail@rotork.com.sg

Rotork Fluid System
Rotork Controls, Inc.
2180 South McDowell Blvd.
Suite B
Petaluma, California 94954
USA
Tel: +1 707 769 4880
Fax: +1 707 769 4888
Email: info@rotork.com

Rotork Fluid System
Rotork Controls (Canada) Ltd.
#9, 820 28th Street, NE
Calgary, Alberta T2A 6K1
Canada
Tel: +1 403 569 9455
Fax: +1 403 569 9414
Email: info@rotork.ca

All Rotork Fluid System actuators are manufactured under a third party accredited ISO9001 quality assurance program.

Published and produced by Rotork Fluid System. Rotork recognises all registered trademarks. As we are continually developing our products, their design is subject to change without notice. Latest information available on www.rotork.com