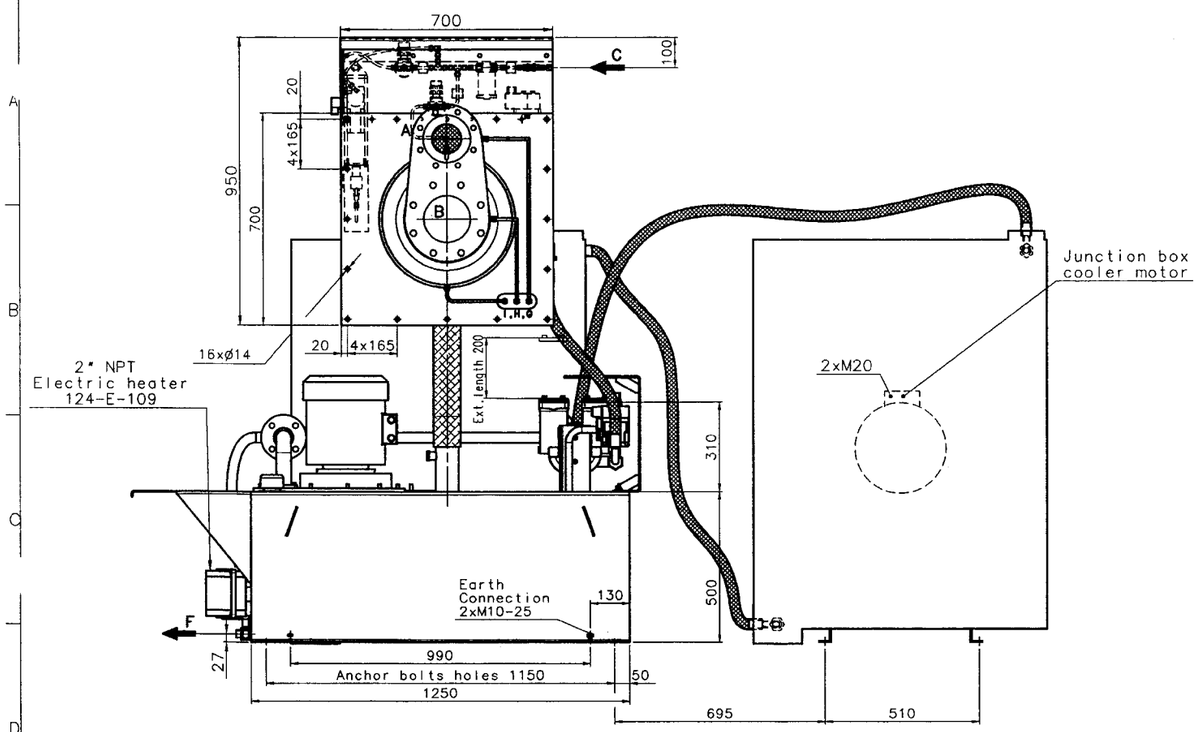

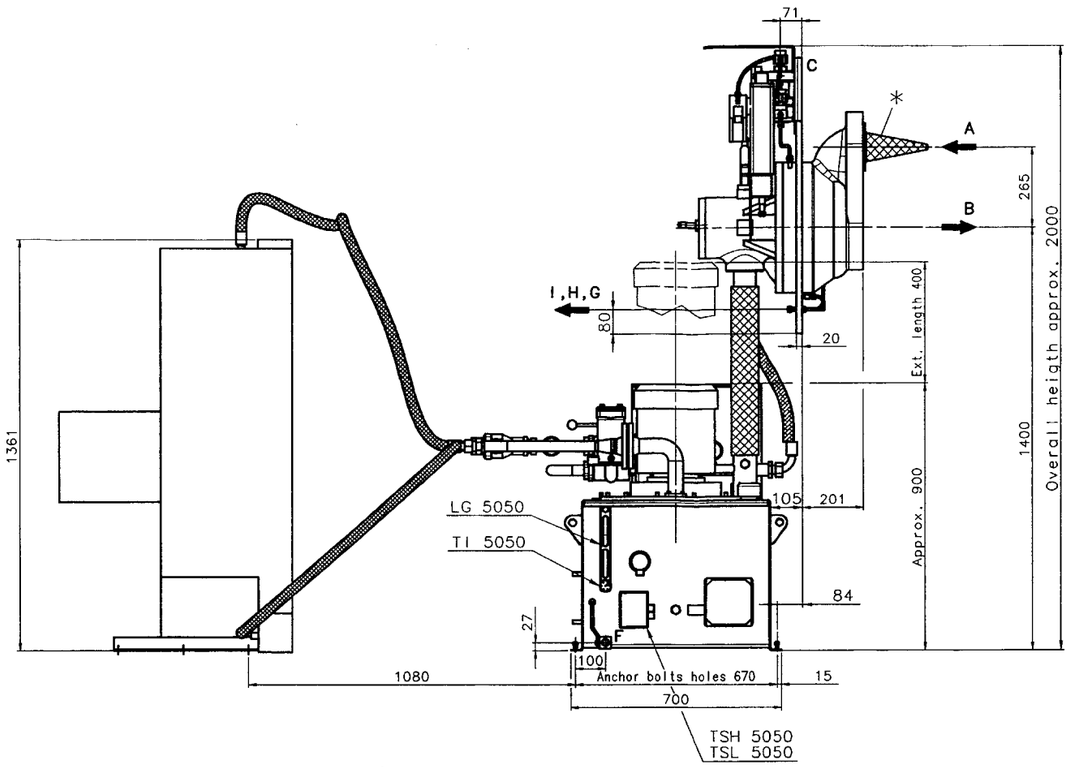

TOP VIEW WITHOUT SOLAR COVER

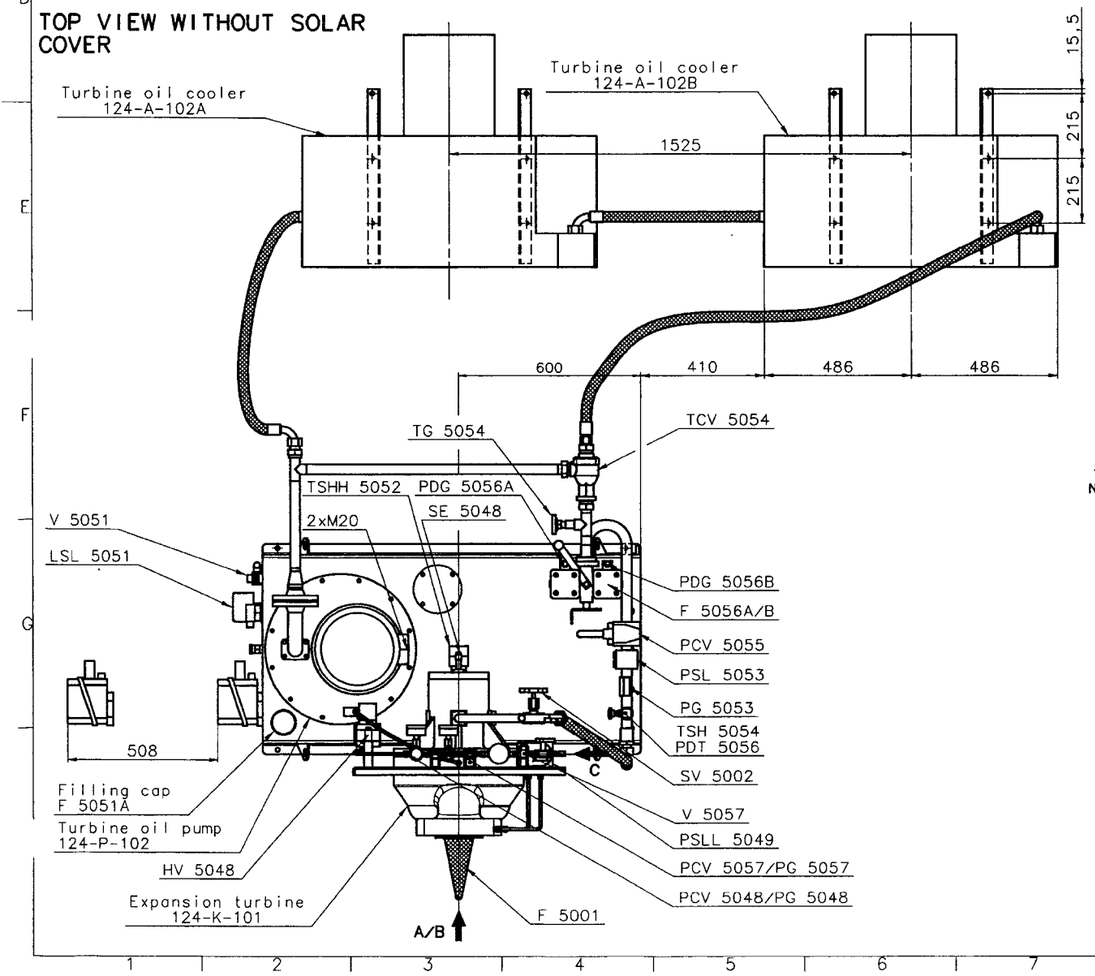

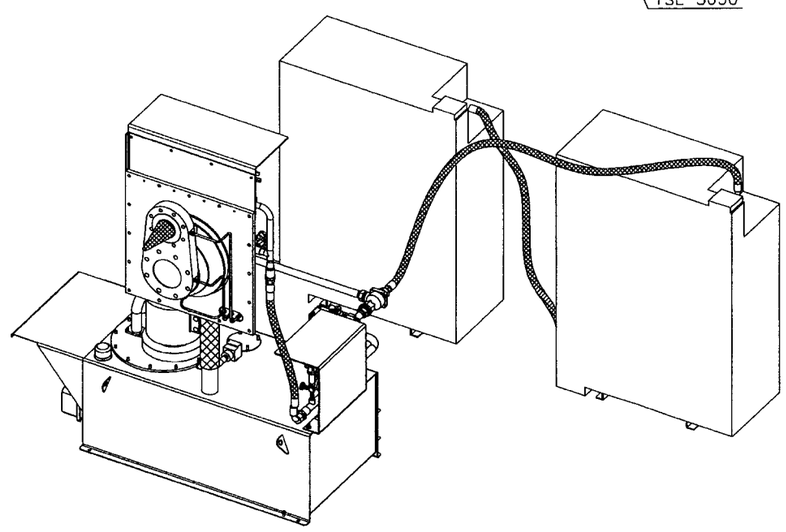

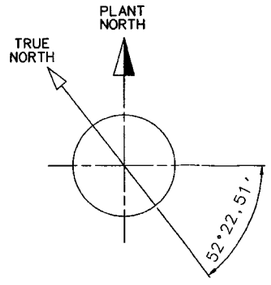

WEIGHT:

Expander Assy	:	200 Kg
Oil cooler	:	380 Kg
Lube oil system	:	280 Kg
(-with oil)	:	540 Kg
TOTAL approx.	:	1400 Kg

Pos.	Connection	Size / Rating / Form
A	Turbine inlet	ANSI 4" 150 lbs FF
B	Turbine outlet	ANSI 6" 150 lbs FF
C	Sealgas inlet oil free	G 1/4" FEMALE
F	Oil tank drain	Rp 1/2" F. Drain valve
G	Turbine inlet press.	Tube ø 8 mm OD (plugged)
H	Turbine outlet press.	Tube ø 8 mm OD (plugged)
I	Drain	Tube ø 8 mm OD (plugged)

REV.	DATE	DESCRIPTION	ORIG.	PREP.	CHKD.	APPD.	CONT. APPD.
5	02.05.06	FINAL		L.Le.		LPe	
4	09.03.06	FOR FINAL		L.Le.	H.W.	LPe	
3	26.01.06	FOR APPROVAL		L.Le.	H.W.	LPe	
2	16.12.05	INTERNAL REVIEW		L.Le.	H.W.	J-L.L.	
1	15.11.05	INTERNAL REVIEW		H.W.	S.M.	R.D.	
0	07.11.05	INTERNAL REVIEW		L.Le.	H.W.	J-L.L.	

SOUTH PARS GAS FIELD DEVELOPMENT
PHASES 9 & 10, ASSALUYEH-IRAN
ONSHORE FACILITIES

N.I.O.C
PARS OIL AND GAS COMPANY

PROJECT No.: PDGC-760-81-156
DOC. CLASS.
SCALE: 1:10

DWG. EST3661
JOB L40986

GS E&C
OIEC
TGEC

TITLE: GNT 1900 PLANT
EXPANSION TURBINE ASSEMBLY
DRAWING-124-K-101

DRAWING No. VP-6340S-124-U101-046-Rev. 5
SHEET No. 1 OF 1
REV. 5

CRYO STAR

Title
ECO 120 - SIAD MI
GENERAL ARRANGEMENT
South Pars 9&10

Scale 1/10

W.O. / Document No. F5979

Drawing No. 702 136813

Page 1 of 1

Size A1

THIS DOCUMENT IS THE SOLE PROPERTY OF N.I.O.C., ALL INFORMATION CONTAINED HEREIN MAY NEITHER BE REPRODUCED, USED, DISCLOSED, TRANSMITTED OR IN ANY WAY PUBLIC WITHOUT THE WRITTEN PERMISSION OF THE OWNER.

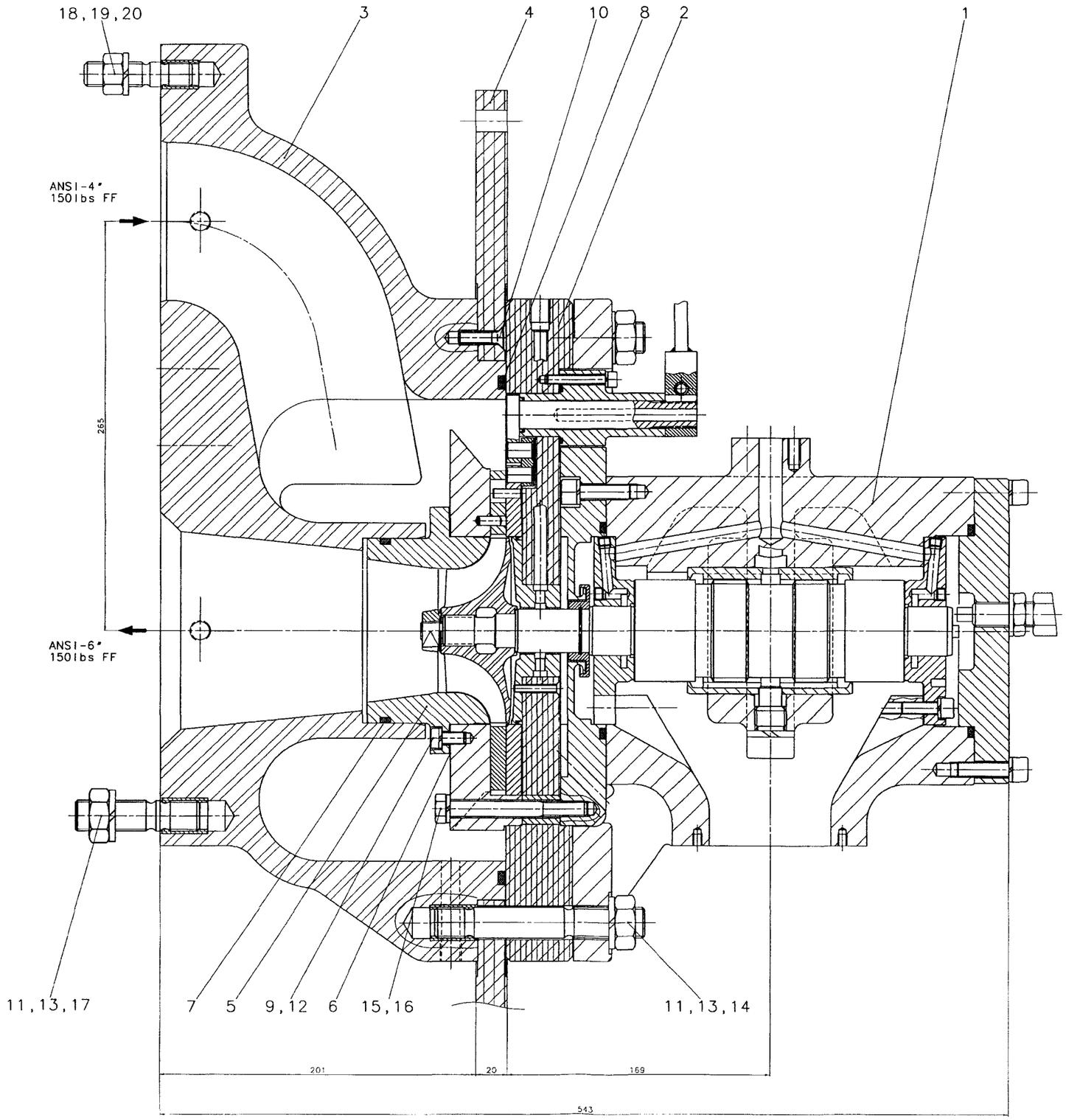

Check list No.: 706 122071-05

Rev	Rev. No	Issue / Description	Date	Drawn	Date	Checked
c						
b						
a						
0	—	Original issue	13.12.05	Kaschik	15.12.05	

Dimensions | Material | Origin No.

CRYO STAR

Title: ECO 120 Turbine / Oil broke

t1

Scale: 1:1

W.O. / Document No.: F5979.01

Drawing No.: 762 137207

Page of

Size: 0

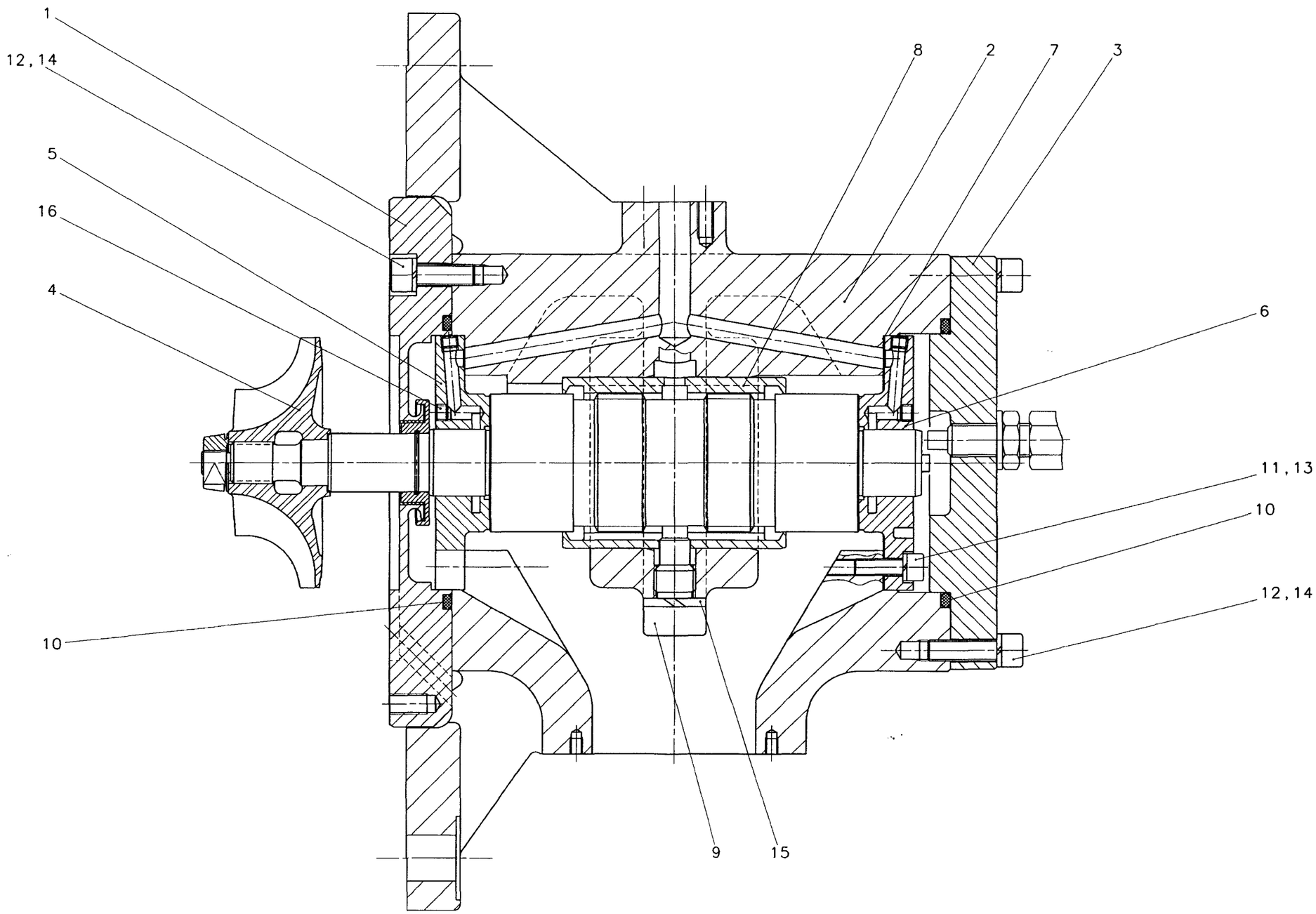

Rev	Rev No	Issue / Description	Date	Drawn	Date	Checked
c						
b						
a						
0	–	Original Issue	13.12.05	KoechlC	16.12.05	

Dimensions | Material | Origin No.

CRYO STAR

Title: ECO 120 Cartridge assy.

t1

Scale %

W.O. / Document No.: F5979.01

Page of

Drawing No.: 762 137208

Size: 1

This Document is in not provided to other persons.

Property of Cryostar France, it may not be copied, its contents disclosed or misused in any other way.

Ce document technique est la propriété de Cryostar France, il ne peut ni être copié, ni communiqué ni utilisé au utilisation abusive sont interdites.

Es, es mit, technischer Unterlage behält sich Cryostar France das Recht vor, ohne Zustimmung nicht noch, anderweitig missbräuchlich verwendet werden.

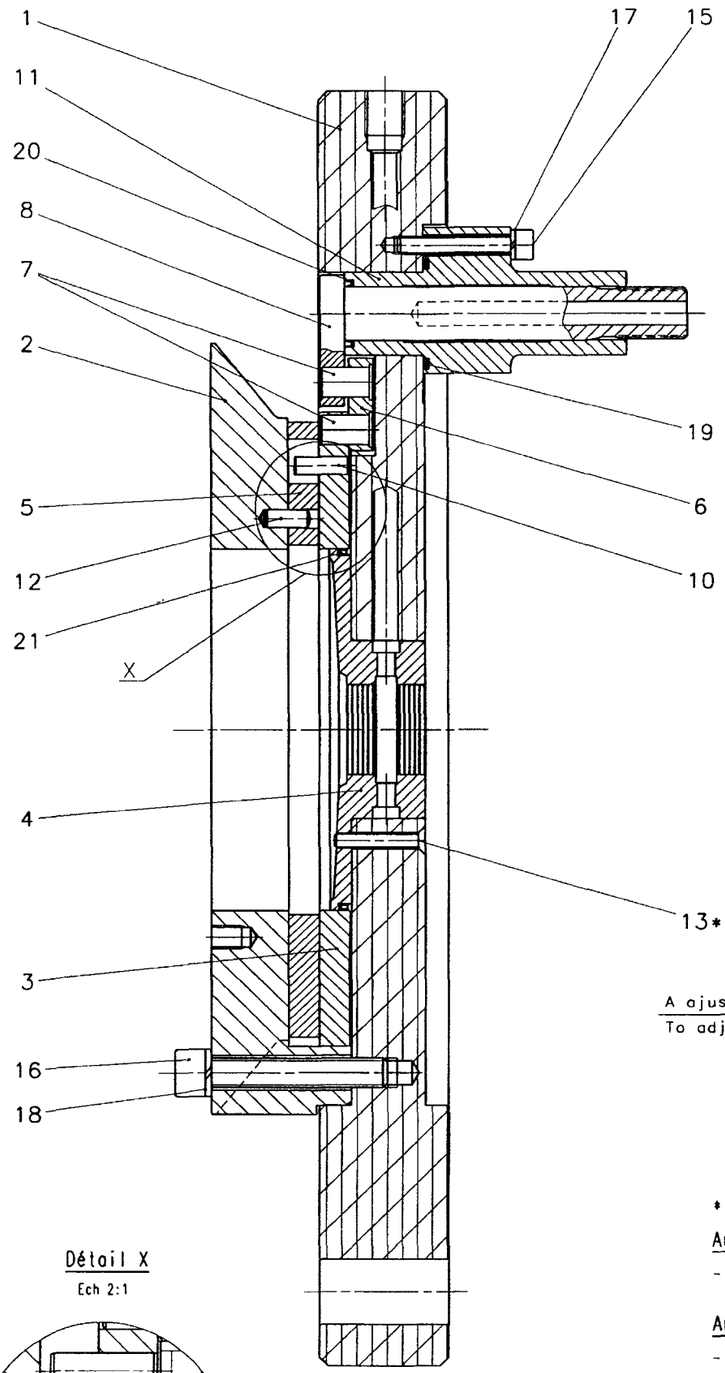

View without Pos.: 2,12,16,18

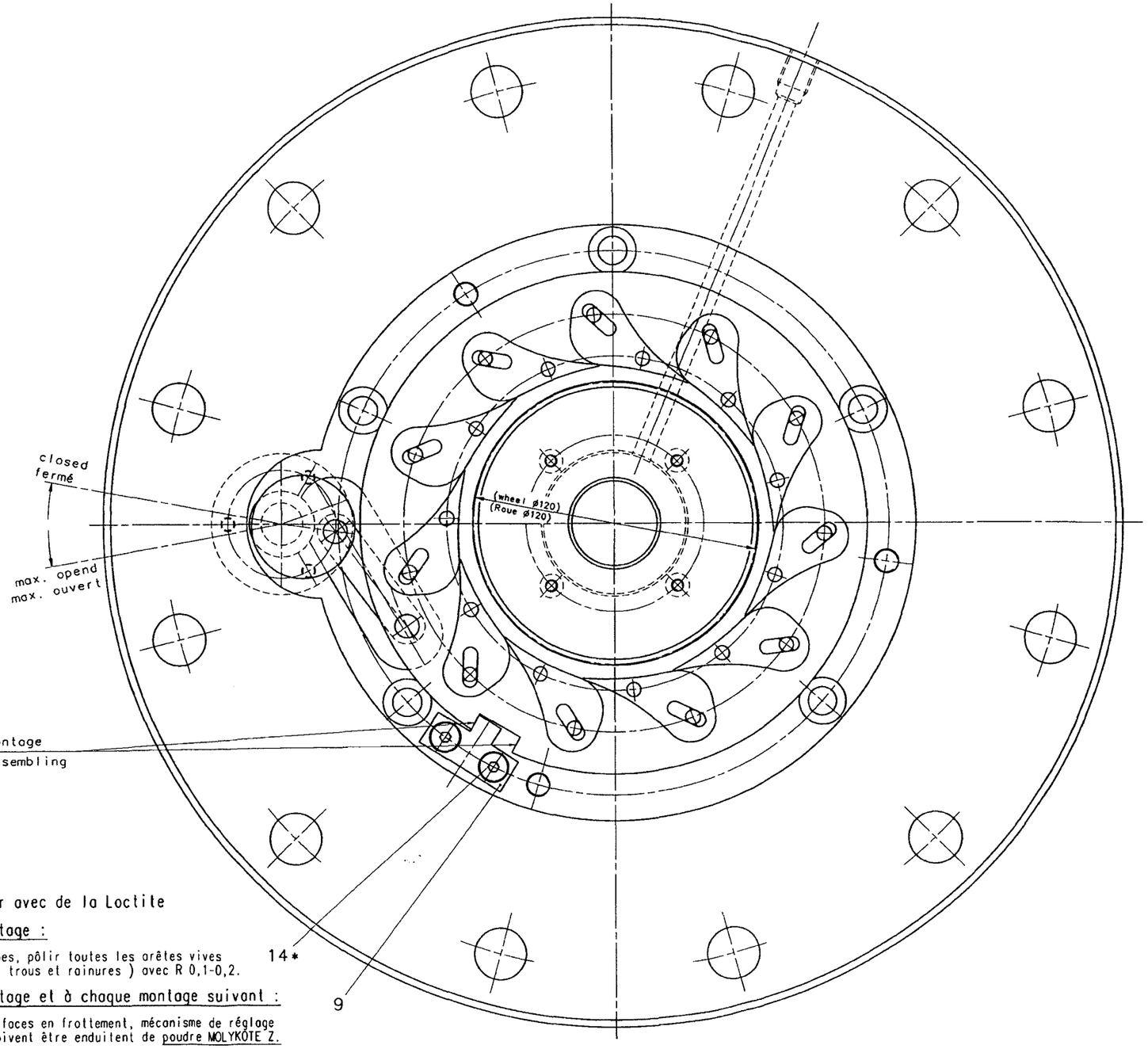

A ajuster au montage

To adjust by assembling

Détail X

Ech 2:1

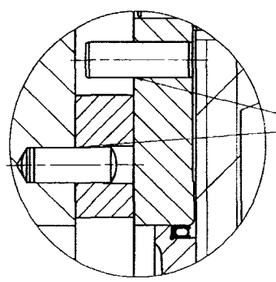

Remarque

Avant montage serré de la goupille, contrôler si le trou est chanfreiné, et éventuellement reprendre à min. 0,2 x 45°.

Remark

Press fit dowel pin, chek that hole is chamfered to 0,2 x 45°.

* Sécuriser avec de la Loctite

Au 1er montage :

- Sur les aubes, pôlir toutes les arêtes vives (contours, trous et rainures) avec R 0,1-0,2.

Au 1er montage et à chaque montage suivant :

- Toutes les faces en frottement, mécanisme de réglage inclus, doivent être enduitent de poudre MOLYKOTE Z.

* Secured with Loctite

For 1st assembling :

- On all nozzles, polish all sharp edges (contours, holes and grooves) with R 0,1-0,2.

For 1st assembling and each subsequent assembly :

- All rubbing faces, mechanical movements included, must be brushed with MOLYKOTE Z powder.

Rev	Rev No	Issue / Description	Date	Drawn	Date	Checked
c						
b						
a						
0	–	Original issue	13.12.05	Koech IC	14.12.05	

Dimensions | Material | Origin No.

CRYO STAR

Title: ECO 120 Nozzle assy.

Scale %: 1:1

W.O. / Document No.: F5979.01

Page of

Drawing No.: 762 137209

Size: 1

This Document is the property of Cryostar France, it is only provided for information purposes.

Ces documents techniques sont la propriété de Cryostar France, ils ne peuvent être communiqués, utilisés ou reproduits sans autorisation écrite préalable.

Technische Unterlage behalten wir, Cryostar France als Eigentum, sie dürfen weder vervielfältigt noch, direkt oder indirekt, anderen zugänglich gemacht werden.

Ce diese technische Unterlage behalten wir, Cryostar France alle Rechte vor. Sie darf weder vervielfältigt noch, dritten Personen mitgeteilt noch, anderweitig missbräuchlich verwendet werden.

Ce documents techniques sont la propriété de Cryostar France; Toute copie, communication des tiers ou utilisation abusive sont interdites.

This Document is the property of Cryostar France. It is not permited to copy it, or to relate its contents to other persons, or to misuse it in any other way.

EXPANDER

BRAKE

Coller à la LOCTITE

Secured with LOCTITE

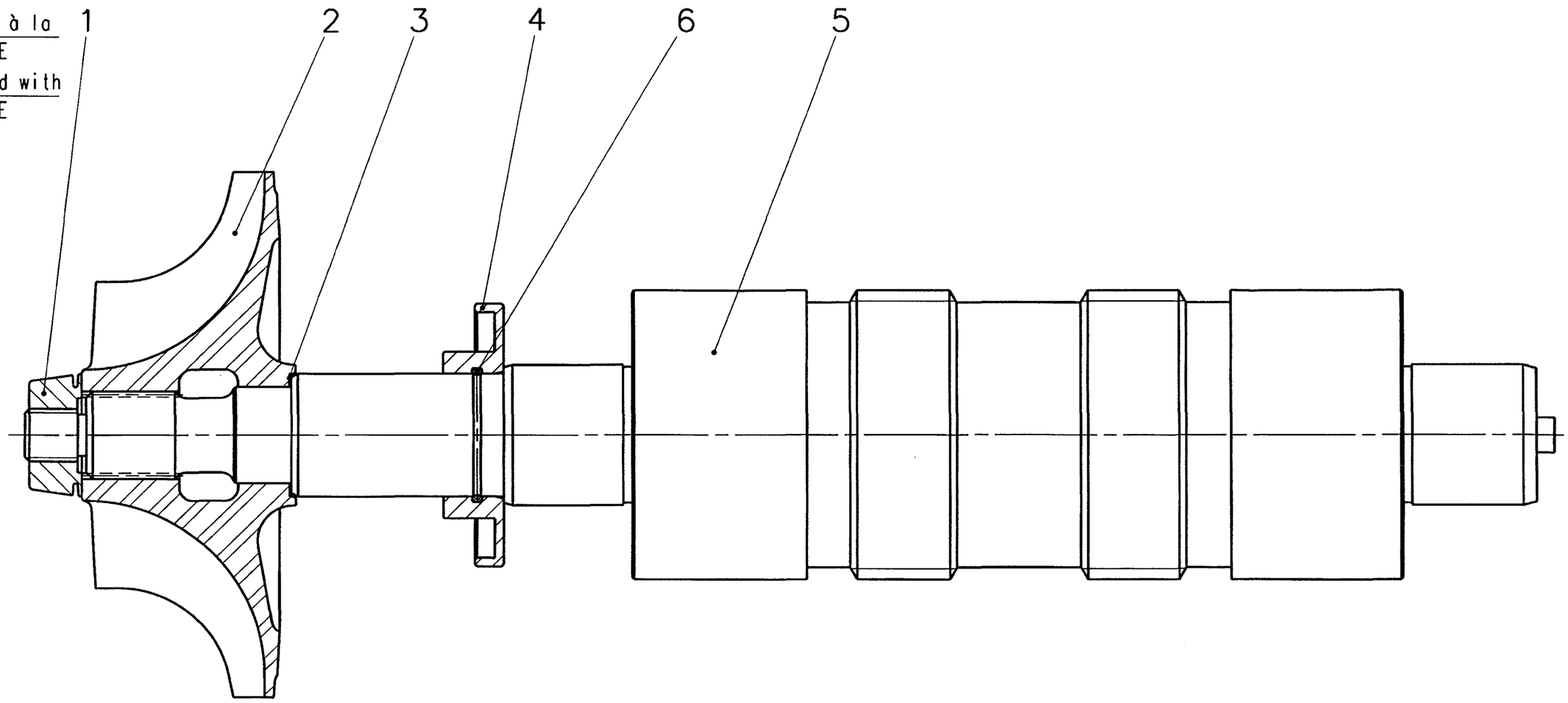

Balance quality G2.5by ISO 1940

Nominal speed and residual unbalance max., see balance protocol.

Qualité d'équilibrage G2.5 d'après ISO 1940

Vitesse nominale et balourd résiduel max. ,voir protocole d'équilibrage.

Rev	Rev No	Issue / Description	Date	Drawn	Date	Checked
c						
b						
a						
0	–	**Original Issue**	13.12.05	KoechIC	14.12.05	

Dimensions | Material | Origin No.

CRYO STAR

Title: ECO 120 Rotor assy.

t1

Scale %

W.O. / Document No.: F5979.01

Page of

Drawing No.: 762 137210

Size: 3

User: REGLIM

Bill of Material / Nomenclature

Valid BOM

List P/N : 762137207

Turbine / Oil-brake
ECO 120/32- A F5979.01

Created:13.12.05 by:KOECHLC
Updated:13.12.05

Pos	quantity	Unit	Factor	P/N Description	I	D	Material Dimentions
001	1.000	PC	1.000	762137208 Cartridge assembly			
002	1.000	PC	1.000	762137209 Nozzle assembly			
003	1.000	PC	1.000	740120918 Expander casing			
004	1.000	PC	1.000	740110734 Insulating plate		C	
005	1.000	PC	1.000	740120907-04 Shroud expander-side (wheel open)			
006	1.000	PC	1.000	740110731 Shim			
007	1.000	PC	1.000	798170458 O-ring			
008	1.000	PC	1.000	798170705 O-ring			
009	6.000	PC	1.000	795000367 Hexagon socket small head cap screw			
010	8.000	PC	1.000	795001205 Hexagon socket flat head cap screw			
011	20.000	PC	1.000	730000349 Hexagon nut 0.8d			
012	6.000	PC	1.000	730010289 Spring washer			
013	20.000	PC	1.000	730000350 Spring washer			
014	12.000	PC	1.000	795000926 Stud (1.25d)			
015	5.000	PC	1.000	795000373 Hexagon head bolt			
016	5.000	PC	1.000	730000005 Spring washer			
017	8.000	PC	1.000	795000677 Stud (1.25d)			

User: REGLIM

Bill of Material / Nomenclature

Valid BOM

List P/N : 762137207

Turbine / Oil-brake
ECO 120/32- A F5979.01

Created:13.12.05 by:KOECHLC
Updated:13.12.05

Pos	quantity	Unit	Factor	P/N Description	I	D	Material Dimentions	
018	8.000	PC	1.000	730000528 Stud (1.25d)				
019	8.000	PC	1.000	730000203 Hexagon nut 0.8d				
020	8.000	PC	1.000	730000422 Spring washer				

User: REGLIM

Bill of Material / Nomenclature

Valid BOM

List P/N : 762137208

Cartridge assembly
F5979.01 ECO 120

Created:13.12.05 by:KOECHLC
Updated:13.12.05

Pos	quantity	Unit	Factor	P/N Description	I	D	Material Dimentions
001	1.000	PC	1.000	740110732 Intermediate labyrinth		A	
002	1.000	PC	1.000	740110511 Bearing casing (ECO,TFC)		A	
003	1.000	PC	1.000	740112062-01 Cover			
004	1.000	PC	1.000	762137210 Rotor assembly			
005	1.000	PC	1.000	740052101 Bearing expander-side		B	
006	1.000	PC	1.000	740052100 Bearing brake/-compressor		B	
007	1.000	PC	1.000	740052056 Shim		A	
008	1.000	PC	1.000	740113883 Bush		A	
009	1.000	PC	1.000	709050546 Screw remachining		C	
010	2.000	PC	1.000	730010283 O-ring			
011	12.000	PC	1.000	730000416 Hexagon socket head cap screw			
012	12.000	PC	1.000	730000022 Hexagon socket head cap screw			
013	12.000	PC	1.000	730010289 Spring washer			
014	12.000	PC	1.000	730010274 Spring washer			
015	1.000	PC	1.000	730010687 Spring washer			
016	4.000	PC	1.000	730010317 Hexagon socket set screw flat point			

User: REGLIM

Bill of Material / Nomenclature

Valid BOM

List P/N : 762137209

Nozzle assembly
ECO 120

Created:13.12.05 by:KOECHLC
Updated:13.12.05

Pos	quantity	Unit	Factor	P/N Description	I	D	Material Dimentions
001	1.000	PC	1.000	740110735 Insulating disc for exp. locating plate		C	
002	1.000	PC	1.000	740112553-03 Nozzle cover plate			
003	1.000	PC	1.000	740112354-02 Adjusting ring			
004	1.000	PC	1.000	740110743 Labyrinth,expander-side			
005	11.000	PC	1.000	740112499-03 Expander-nozzle			
006	1.000	PC	1.000	740110741 Lever			
007	2.000	PC	1.000	740110739 Parallel pin			
008	1.000	PC	1.000	740110737 Adjusting bolt			
009	1.000	PC	1.000	740053858 Stop		B	
010	11.000	PC	1.000	740102359 Parallel pin			
011	1.000	PC	1.000	740110738 Guide bush			
012	11.000	PC	1.000	795080819 Parallel pin			
013	4.000	PC	1.000	730001755 Hexagon socket flat head cap screw			
014	2.000	PC	1.000	730010275 Hexagon socket flat head cap screw			
015	3.000	PC	1.000	795000353 Hexagon socket head cap screw			
016	3.000	PC	1.000	795000480 Hexagon socket head cap screw			
017	3.000	PC	1.000	730010273 Spring washer			

Bill of Material / Nomenclature

List P/N : 762137209

Nozzle assembly
ECO 120

Created:13.12.05 by:KOECHLC
Updated:13.12.05

Pos	quantity	Unit	Factor	P/N Description	I	D	Material Dimentions
018	3.000	PC	1.000	730010274 Spring washer			
019	1.000	PC	1.000	798170387 O-ring			
020	1.000	PC	1.000	798180780 Gasket 'Variseal-H'			
021	1.000	PC	1.000	798180980 Gasket 'Variseal-M'			

User: REGLIM

Bill of Material / Nomenclature

Valid BOM

List P/N : 762137210

Rotor assembly
ECO 120

Created:13.12.05 by:KOECHLC
Updated:13.12.05

Pos	quantity	Unit	Factor	P/N Description	I	D	Material Dimentions	
001	1.000	PC	1.000	740110740 Special nut				
002	1.000	PC	1.000	740112552-12 Expander wheel				
003	1.000	PC	1.000	740110730 Shim				
004	1.000	PC	1.000	740023208 Slinger ring				
005	1.000	PC	1.000	740114584 Shaft		B		
006	1.000	PC	1.000	798170157 O-ring				