THE DESIGN OR PART THEREOF CONTAINED IN THIS DOCUMENT WAS DEVELOPED FOR SK FOR THE PROJECT AND REMAINS THE PROPERTY OF SK. ALL FLUOR PROPRIETARY INFORMATION OR UNDERLYING INTELLECTUAL PROPERTY UTILIZED IN THE CREATION OF THE DESIGN CONTAINED HEREIN SHALL REMAIN THE PROPERTY OF DAELIM.

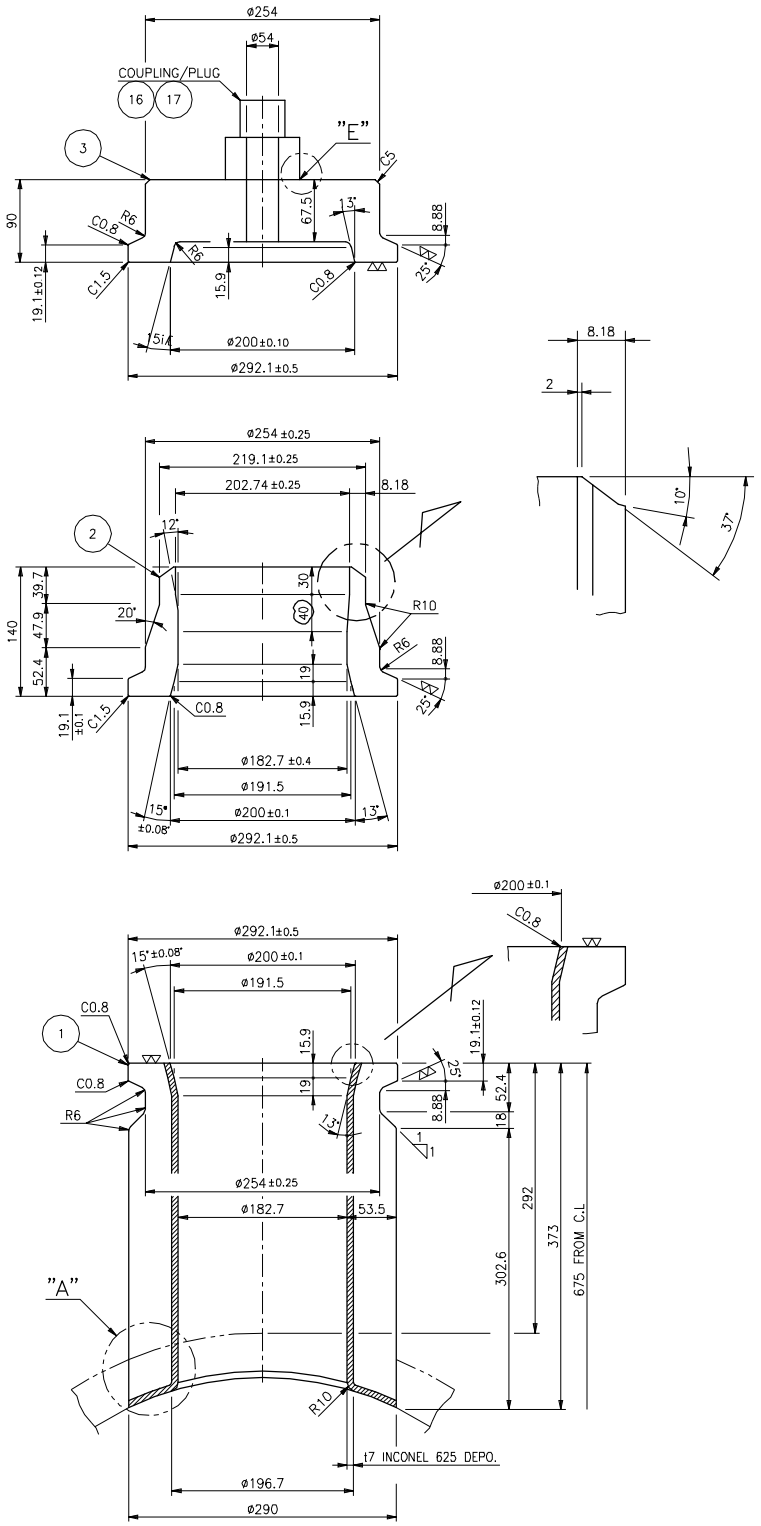

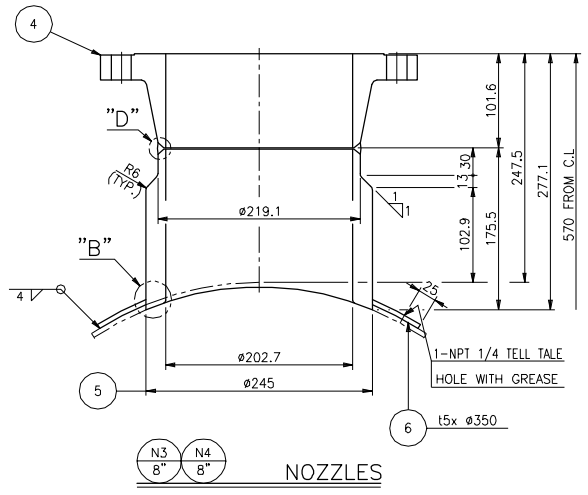

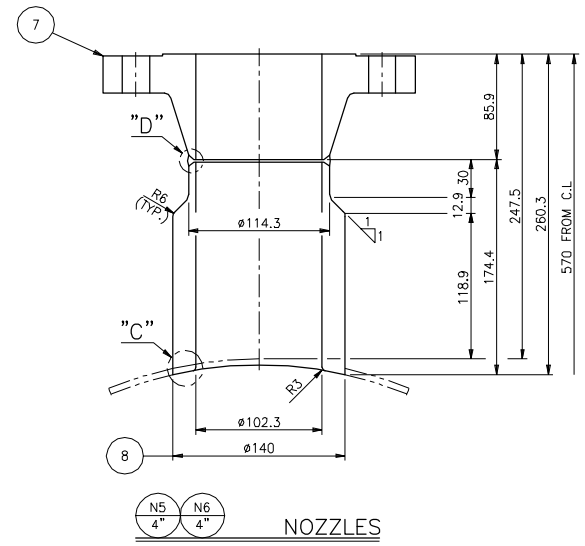

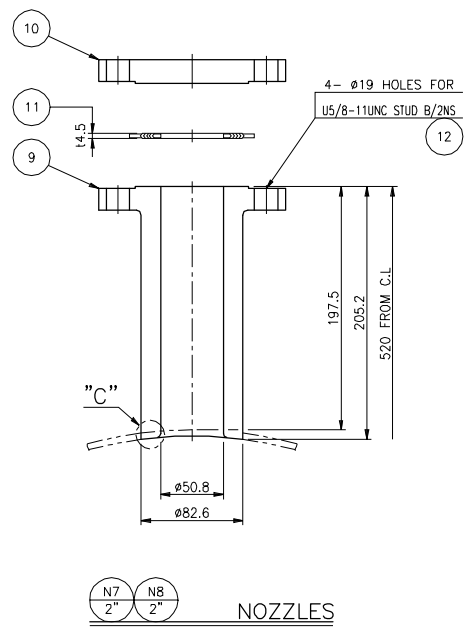

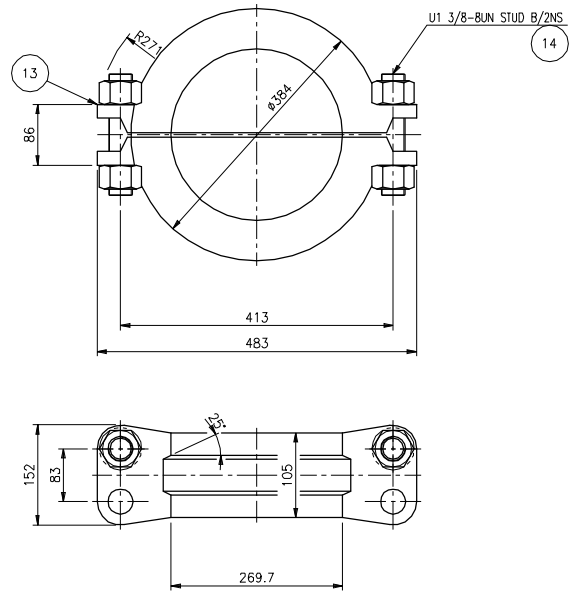

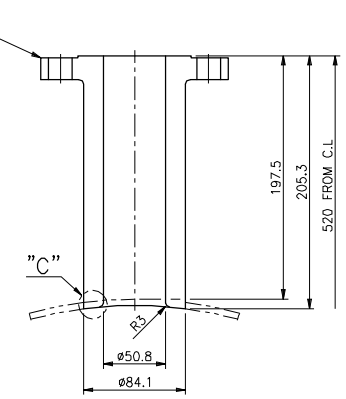

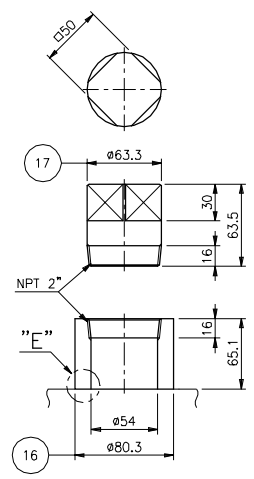

DETAIL OF COUPLING

NOTES

1. ALL DIMENSIONS ARE IN mm UNLESS OTHERWISE NOTED.
2. THE BOLT HOLES OF FLANGES SHALL STRADDLE THE VESSEL N. S. CENTERLINE TO VERTICAL CENTERLINE OF VESSEL AS SHOWN IN FIG-1 UNLESS OTHERWISE SPECIFIED.
3. EACH REINF. PAD SHALL HAVE A TELL TALE HOLE LOCATED AS FOLLOWS: REF. TO FIG-2
   1) FOR NOZZLES ATTACHED AT HEAD, THE FARTHEST FROM HEAD, CENTERLINE : (FOR NOZZLES AT HEAD CENTER : 180° DIRECTION)
   2) FOR NOZZLES ATTACHED AT SHELL, LOWER POINT OF THE VESSEL.

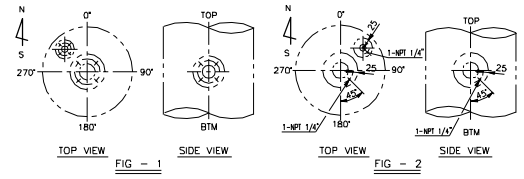

4. GASKET MATERIAL (SPIRAL WOUND t4.5)
   1) FILLER : PTFE
   2) HOOP : ALLOY N06625
   3) INNER RING : ALLOY N06625
   4) OUTER RING : ALLOY N06625

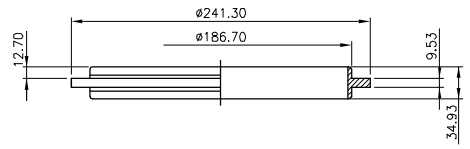

18 DETAIL OF SEAL RING

FINAL

ITEM	NAME OF PART / PART CODE	MATERIAL	Q'TY	SPARE	UNIT	Q'TY FOR 1 SET	REMARKS
18	SEAL RING(72)	INCONEL 625	2	2	EA		SEE DWG
17	PLUG	SA105	2		EA		ø63.3 (NPT 2")
16	COUPLING	SA105	2		EA		ø80 (NPT 2" ASME 6000#)
15	FLANGE	SB 564 UNS.N06625 Gr.1	1		EA		2" ASME 300# LWN.RF
14	STUD B/HEAVY HEX. 2NS	SA320-B7/SA194-Gr4	8	4	SETS		U1 3/8-8UN x 170L
13	G-LOK CLAMP (X8 HEAVY DUTY)	AISI 4140	2	1	EA		SEE DWG.
12	STUD B/HEAVY HEX. 2NS	SA193-B7/SA194-2H	8	2+2	SETS		U5/8-11UN x 95L
11	GASKET	SEE NOTE 4.	2	2+2	EA		t4.5x2" ASME 150# R.F
10	BLIND FLANGE	SB 564 UNS.N06625 Gr.1	2		EA		2" ASME 150# BL'D.RF
9	FLANGE	SB 564 UNS.N06625 Gr.1	2		EA		2" ASME 150# LWN.RF
8	FORGED NECK	SB 564 UNS.N06625 Gr.1	2		EA		ø140
7	FLANGE	SB 564 UNS.N06625 Gr.1	2		EA		4" ASME 300# WN.RF-S/40
6	REINF. PAD	SB 443 UNS.N06625 Gr.1	2		EA		t5
5	FORGED NECK	SB 564 UNS.N06625 Gr.1	2		EA		ø245
4	FLANGE	SB 564 UNS.N06625 Gr.1	2		EA		8" ASME 150# WN.RF-S/40
3	HYDROTEST COVER	SA105	2		EA		SEE DWG
2	MATING HUB FLANGE	SB 564 UNS.N06625 Gr.1	2		EA		SEE DWG
1	FLANGE(BGR76)	SA350 LF2 + WELD DEPO.	2		EA		8" ASME 900# G-LOK

Rev	Date	BY	Checked	Approved	Approved	Approved	DESCRIPTION
04	09.10.'10	CORE-S.M.	J.C.KIM	H.KANG			FINAL
03	03.19.'10	CORE-S.M.	J.C.KIM	H.KANG			APPROVAL FOR CONSTRUCTION
02	03.05.'10	CORE-S.M.	J.C.KIM	H.KANG			ISSUED FOR APPROVAL
01	02.17.'10	CORE-S.M.	J.C.KIM	H.KANG			ISSUED FOR APPROVAL
00	10.16.'09	CORE-S.M.	J.C.KIM	H.KANG			ISSUED FOR COMMENT
		HANIL			COMPANY		

PARS OIL & GAS COMPANY
SOUTH PARS GAS FIELD DEVELOPMENT
PHASE-1 REVAMPING PROJECT

P.O.G.C.

SCALE: N/A

KMC I.G.C. HANIL

TITLE: 3E-0312 3E-0322 GAS COOLERS DETAIL OF NOZZLES

DRAWING No.:	PROJ No.	Fac.	Area	Dis.	Doc.	Seq.	Rev.	Sheet No.
SP1-225-SPP1-00-VE-DL-012-901-04	SP1-225	SPP1	00	VE	DL	012	04	9/9

CAD FILENAME:

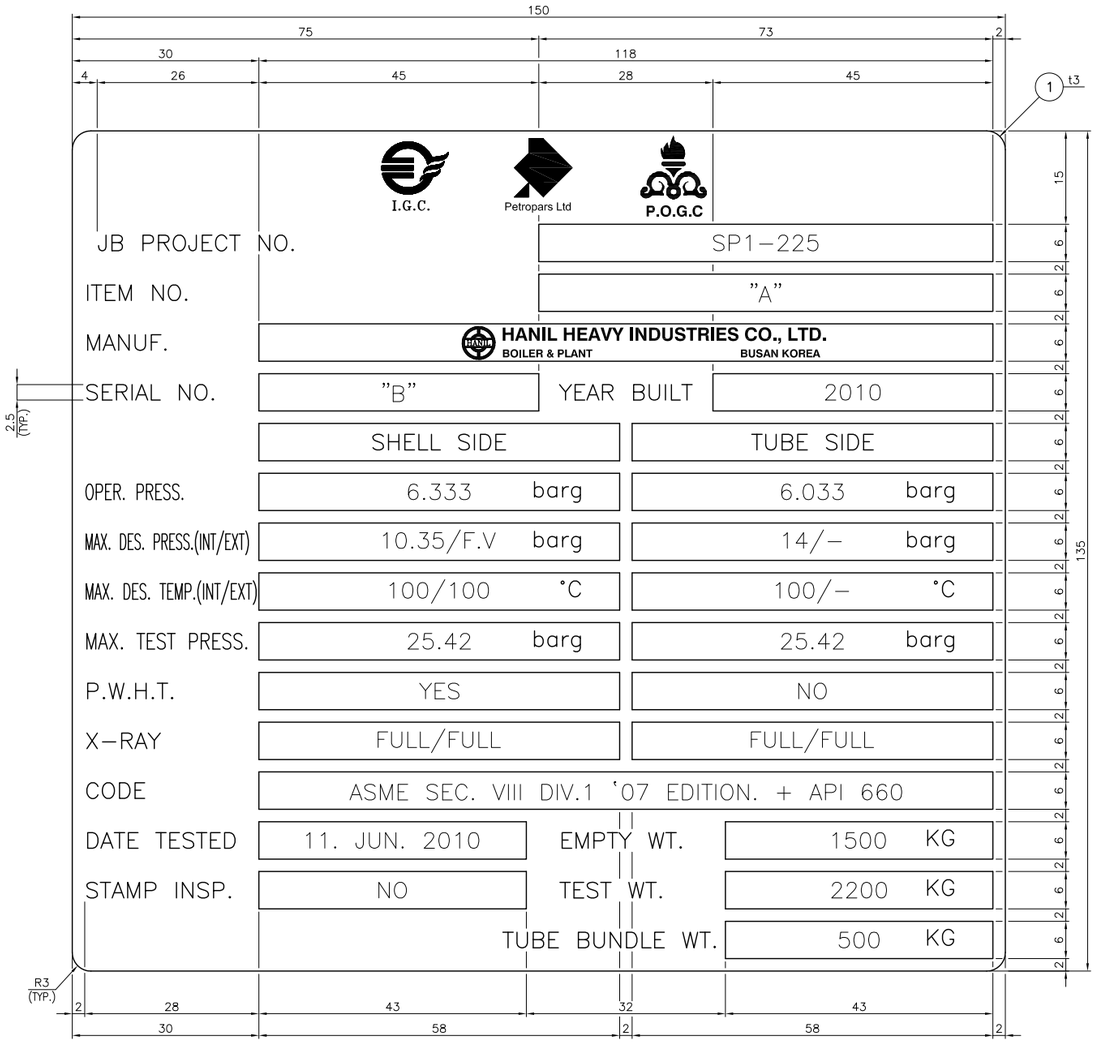

NAME PLATE

S : 2/1

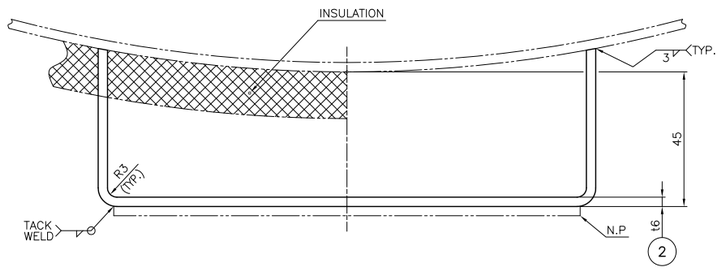

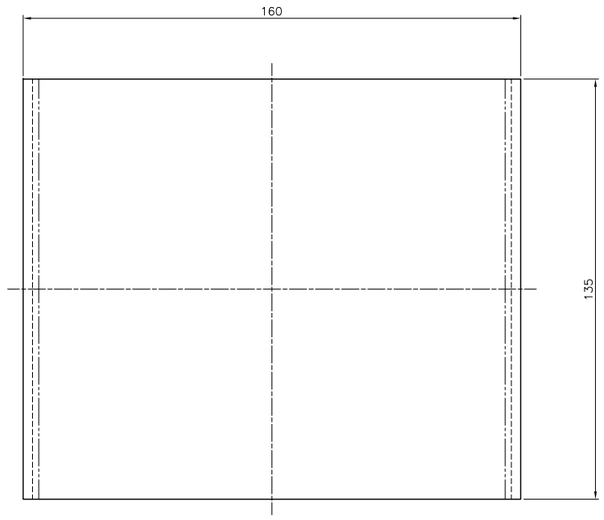

NAME PLATE BRACKET

"A"	"B"
3-E-1113	09-H-37-001
3-E-1123	09-H-37-002

TABLE

FINAL

NOTES

1. ALL DIMENSIONS ARE MM.
2. ENGRAVING TO BE CAPITALS 3 HIGH STAMPING TO BE 5 HIGH
3. LETTERS TO BE GOTHIC TYPE.
4. DATE SHALL BE STAMPED AS FOLLOWS. FOR EXAMPLE : 01. SEP. 2009.

*FOR ONE SET

ITEM	NAME OF PART / PART CODE	MATERIAL	NO. REQ'D	SPARE	UNIT	REMARK
2	BRACKET	SA516-70	1			t6
1	NAME PLATE	304 S.S	1			t3

REV.	DATE	DESCRIPTION	PRE'D	CHK'D	APP'D	AUT'D
04	Sep.10.2010	ISSUE FOR CONSTRUCTION	J.G.PARK	N.H.KWON	J.C.KIM	H.KANG
03	MAY.28.2010	ISSUE FOR CONSTRUCTION	J.G.PARK	N.H.KWON	J.C.KIM	H.KANG
02	MAY.13.2010	ISSUE FOR COMMENT	J.G.PARK	N.H.KWON	J.C.KIM	H.KANG
01	APR.29.2010	ISSUE FOR COMMENT	J.G.PARK	N.H.KWON	J.C.KIM	H.KANG
00	JAN.16.2010	ISSUE FOR COMMENT	S.J.LEE	N.H.KWON	J.C.KIM	H.KANG

PARS OIL & GAS COMPANY
SOUTH PARS GAS FIELD DEVELOPMENT PHASE - 1
P.O.G.C

I.G.C. Petropars Ltd

HANIL HEAVY INDUSTRIES CO., LTD.
HEAT TRANSFER & EQUIPMENTS BUSAN, KOREA

DRAWING TITLE: 3-E-1113/3-E-1123

GLYCOL COOLER
DETAIL OF NAME PLATE

REQ'D NO. 2 SETS

PURCHASER JOB No.: -

JOB No.: -

VENDOR DRAWING No.: VP-3-E-1113-010

SCALE	PURCHASER DRAWING No.	SHEET	SIZE	Rev.
SEE DWG.	SPP1-225-SPP1-00-VE-DL-010-902-04	1 OF 1	A3	04

THE DESIGN OR PART THEREOF CONTAINED IN THIS DOCUMENT WAS DEVELOPED FOR SK FOR THE PROJECT AND REMAINS THE PROPERTY OF SK. ALL FLUOR PROPRIETARY INFORMATION OR UNDERLYING INTELLECTUAL PROPERTY UTILIZED IN THE CREATION OF THE DESIGN CONTAINED HEREIN SHALL REMAIN THE PROPERTY OF DAELIM.

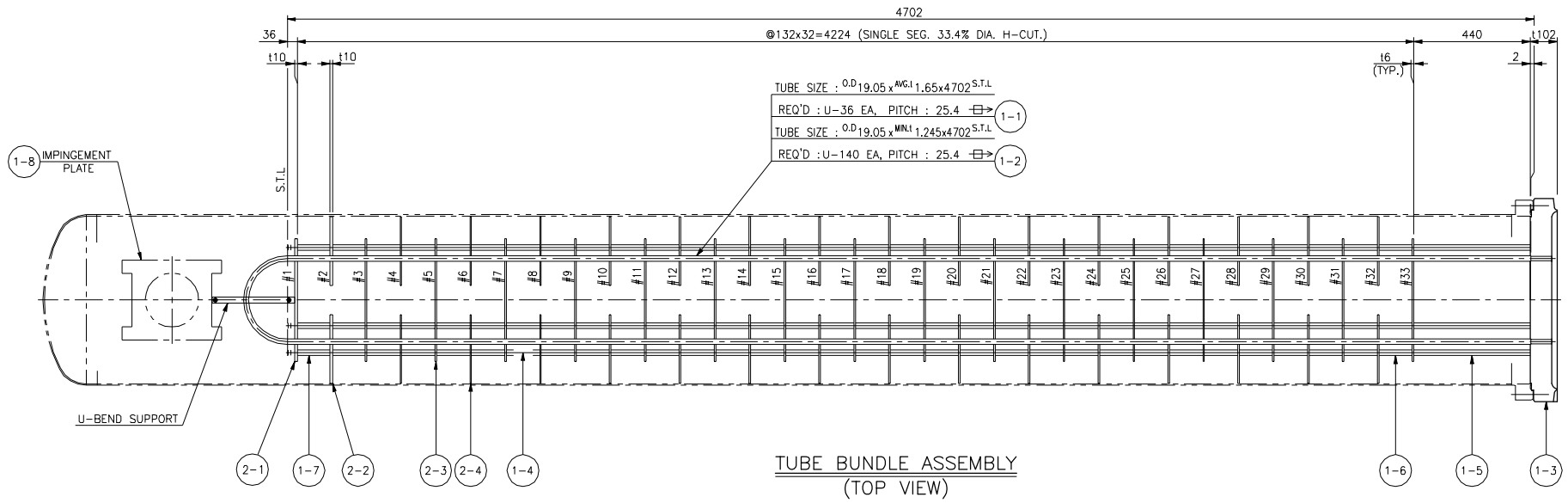

TUBE BUNDLE ASSEMBLY
(TOP VIEW)

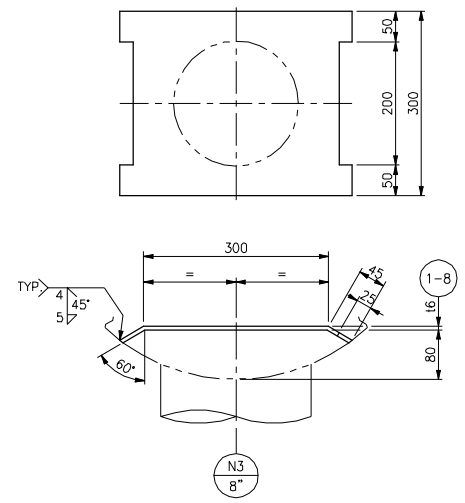

DETAIL OF IMPINGEMENT PLATE

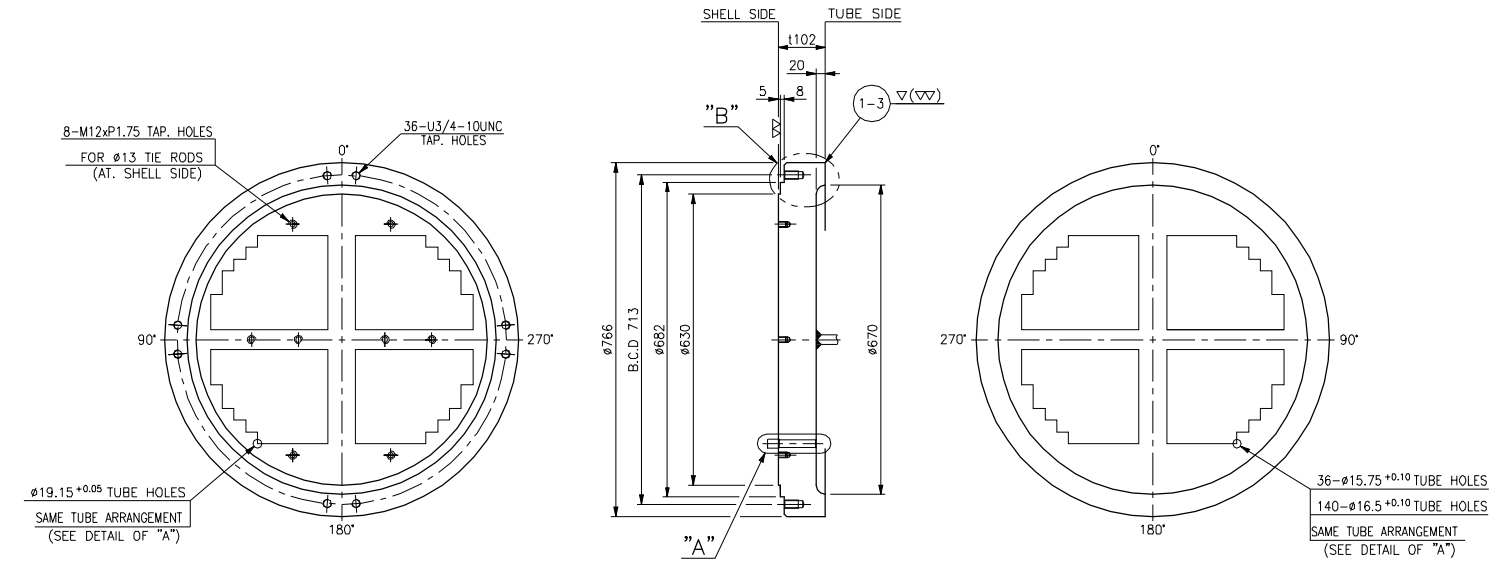

DETAIL OF STATIONARY TUBESHEET

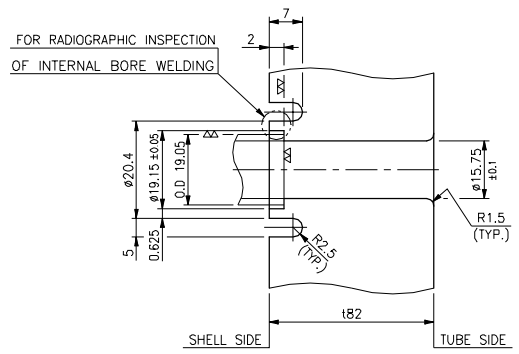

(TUBE SIZE ø19.05xAVG.t1.65)

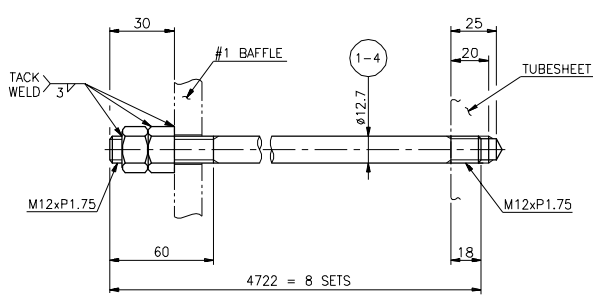

DETAIL OF TIE ROD & 2NUTS

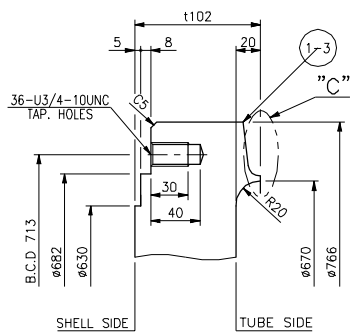

DETAIL OF "B"

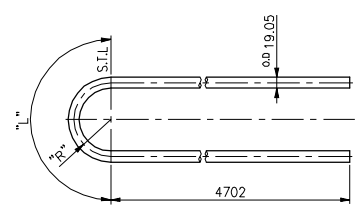

DETAIL OF U-TUBE (1-1) (1-2)

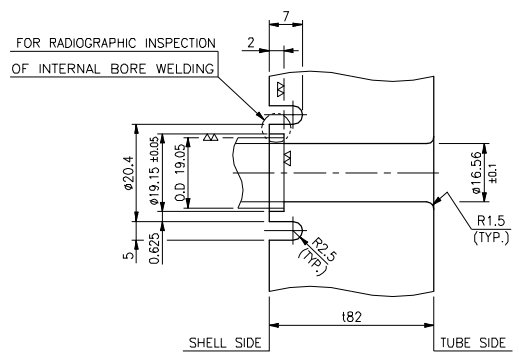

(TUBE SIZE ø19.05xMIN.t1.245)

DETAIL OF "A"

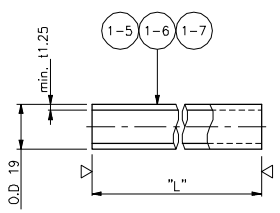

NO.	"L"	Q'TY
(1-5)	440	8
(1-6)	126	248
(1-7)	122	8

DETAIL OF SPACER

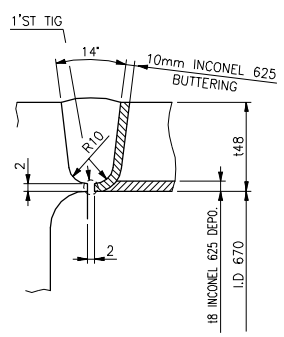

DETAIL OF "C"

	NO.	"R"	"L"	TOTAL LENGTH	Q'T'Y	Th'K
1-1	1	30	94.2	9498.2	18	t1.65
	2	55.4	174	9578	18	t1.65
1-2	3	80.8	253.8	9657.8	18	t1.245
	4	106.2	333.6	9737.6	18	t1.245
	5	131.6	413.4	9817.4	18	t1.245
	6	157	493.2	9897.2	18	t1.245
	7	182.4	573	9977	18	t1.245
	8	207.8	652.8	10056.8	16	t1.245
	9	233.2	732.6	10136.6	14	t1.245
	10	258.6	812.4	10216.4	12	t1.245
	11	284	892.2	10296.2	8	t1.245

FINAL

NOTE

1. B/M NO. (2-1~4) SEE DWG. NO. : VP-3E-0312/0322-006

ITEM	NAME OF PART	MATERIAL	Q'TY	SPARE	UNIT	REMARKS
1-8	IMPINGEMENT BAFFLE	SB 443 UNS.N06625 Gr.1	1		EA	t6
1-7	SPACER	INCONEL ALLOY UNS.N06625	8		EA	ø19x min. t1.25
1-6	SPACER	INCONEL ALLOY UNS.N06625	248		EA	ø19x min. t1.25
1-5	SPACER	INCONEL ALLOY UNS.N06625	8		EA	ø19x min. t1.25
1-4	TIE ROD/2NUTS	SB 446 UNS.N06625 Gr.1	8		SETS	ø12.7 (M12xP1.75)
1-3	STATIONARY TUBESHEET	SB 564 UNS.N06625 Gr.1	1		EA	t102
1-2	TUBE	SB 444 UNS.N06625 Gr.1	140		EA	O.D 19.05 x MIN.t 1.245x5952
1-1	TUBE	SB 444 UNS.N06625 Gr.1	36		EA	O.D 19.05 x AVG.t 1.65x5952
PART CODE			Q'TY FOR 1 SET			

Rev	Date	BY	Checked	Approved	Approved	Approved	DESCRIPTION
04	09.10.'10	CORE-S.M.	J.C.KIM	H.KANG			FINAL
03	03.19'10	CORE-S.M.	J.C.KIM	H.KANG			APPROVAL FOR CONSTRUCTION
02	03.08.'10	CORE-S.M.	J.C.KIM	H.KANG			ISSUED FOR APPROVAL
01	02.17.'10	CORE-S.M.	J.C.KIM	H.KANG			ISSUED FOR APPROVAL
00	10.16.'09	CORE-S.M.	J.C.KIM	H.KANG			ISSUED FOR COMMENT
		HANIL			COMPANY		

PARS OIL & GAS COMPANY
SOUTH PARS GAS FIELD DEVELOPMENT
PHASE-1 REVAMPING PROJECT

P.O.G.C.

SCALE: N/A

KMC I.G.C. HANIL

TITLE: 3E-0312 3E-0322
GAS COOLERS
DETAIL OF
TUBE BUNDLE (1/2)

DRAWING No.:	PROJ No.	Fac.	Area	Dis.	Doc.	Seq.	Rev.	Sheet No.
SP1-225-SPP1-00-VE-DL-010-901-04	SP1-225	SPP1	00	VE	DL	010	04	6/9

CAD FILENAME:

THE DESIGN OR PART THEREOF CONTAINED IN THIS DOCUMENT WAS DEVELOPED FOR SK FOR THE PROJECT AND REMAINS THE PROPERTY OF SK. ALL FLUOR PROPRIETARY INFORMATION OR UNDERLYING INTELLECTUAL PROPERTY UTILIZED IN THE CREATION OF THE DESIGN CONTAINED HEREIN SHALL REMAIN THE PROPERTY OF DAELIM.

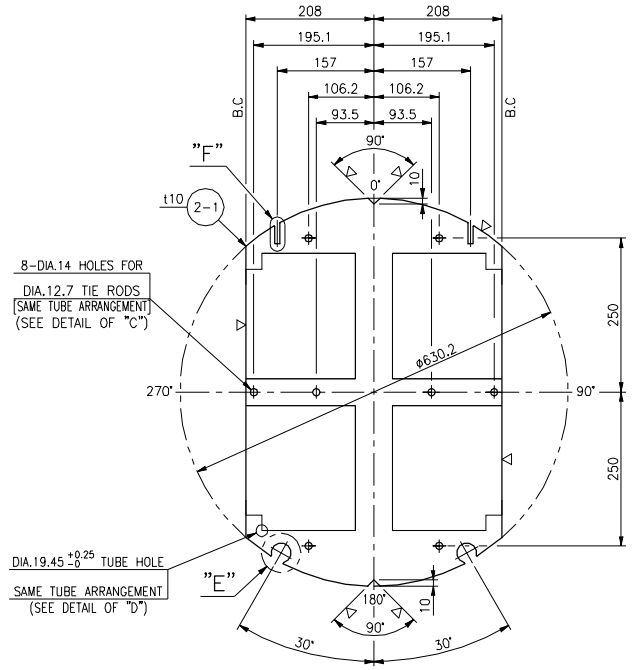

DETAIL OF BAFFLE
(ODD NO. : #1)

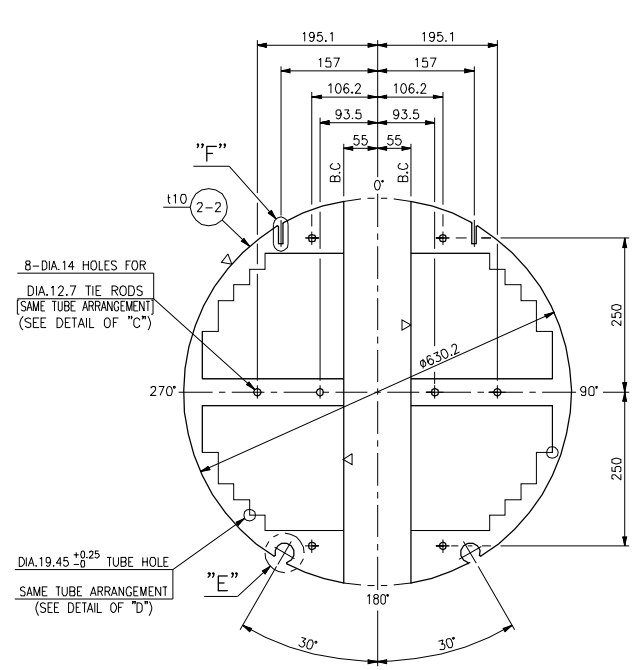

DETAIL OF BAFFLE
(EVEN NO. : #2)

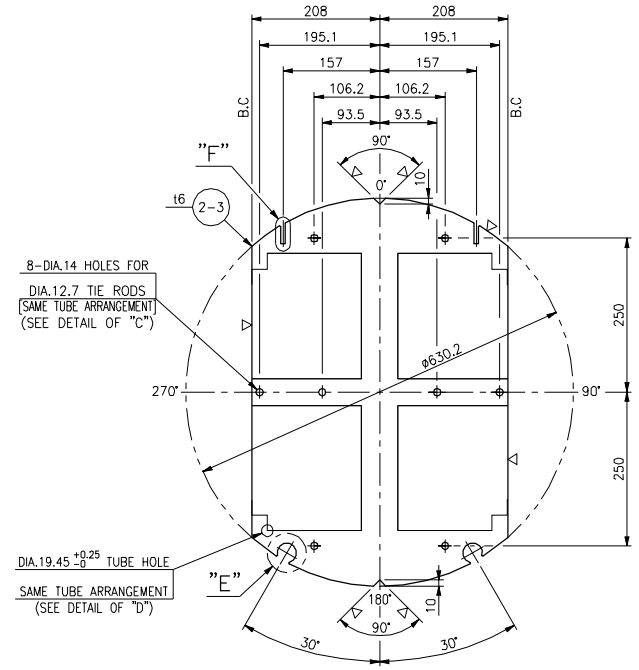

DETAIL OF BAFFLE
(ODD NO. : #3~#33)

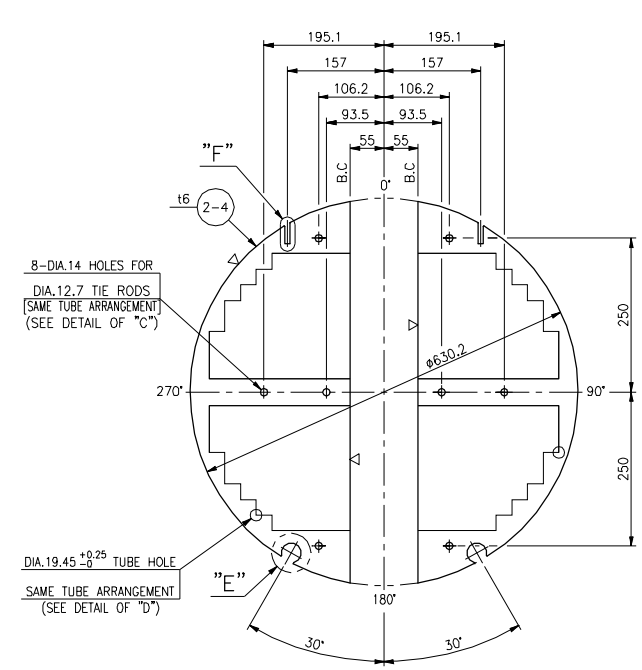

DETAIL OF BAFFLE
(EVEN NO. : #4 ~ #32)

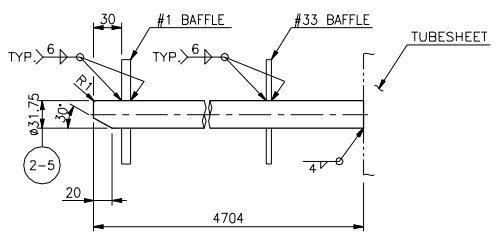

DETAIL OF SLIDING ROD

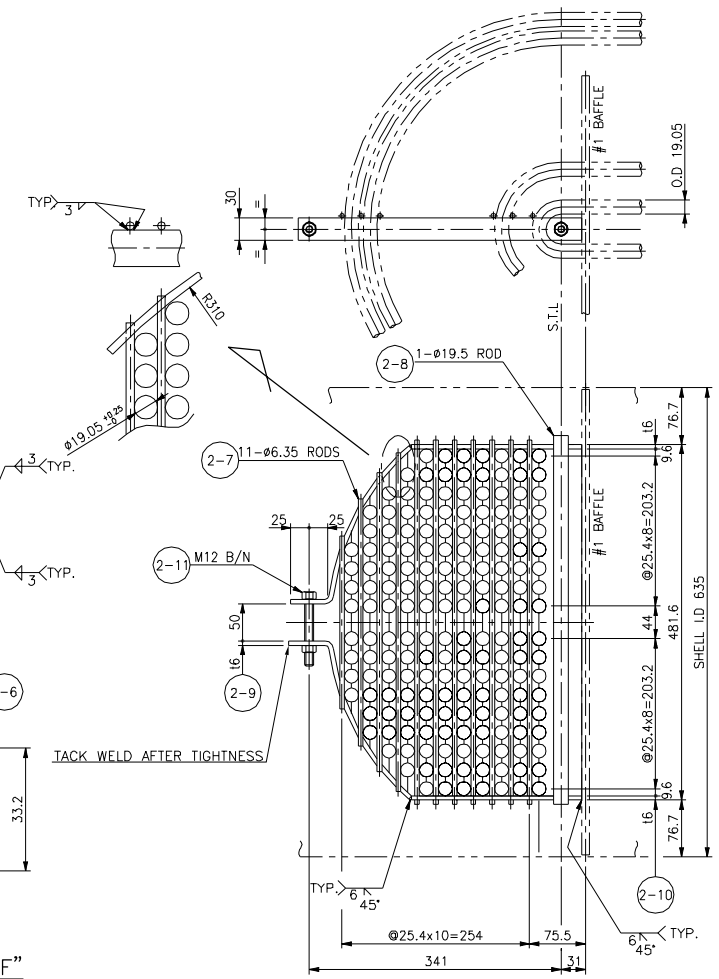

DETAIL OF U-BEND SUPPORT

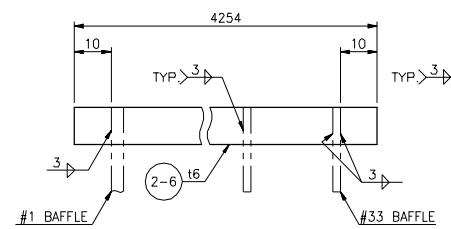

DETAIL OF SEAL STRIP

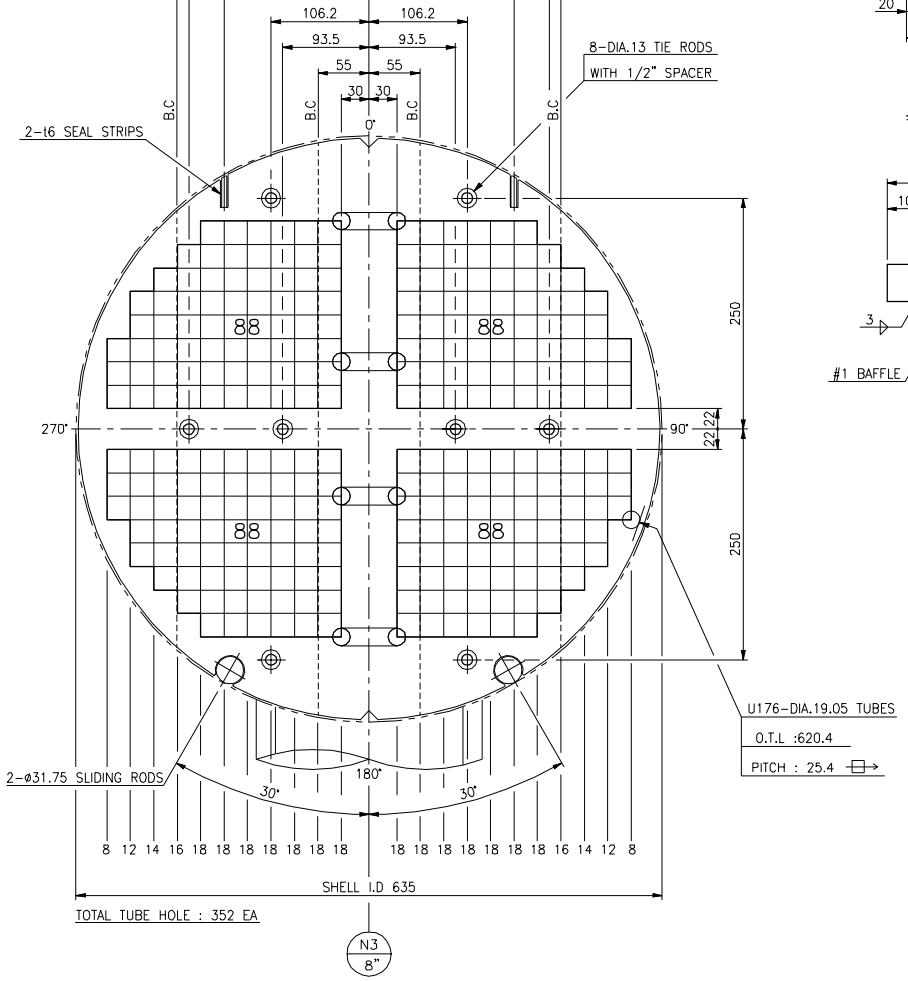

TUBE ARRANGEMENT

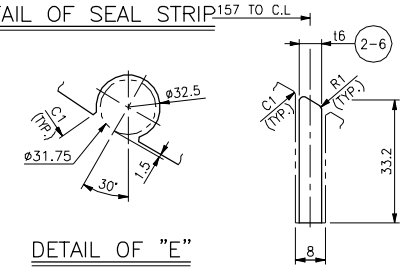

DETAIL OF "E"

DETAIL OF "F"

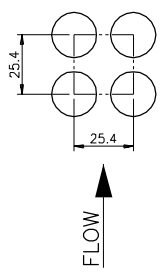

TUBE PITCH (90°)

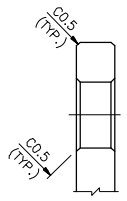

DETAIL OF "C"

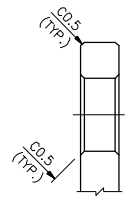

DETAIL OF "D"

FINAL

ITEM	NAME OF PART / PART CODE	MATERIAL	Q'TY / Q'TY FOR 1 SET	SPARE	UNIT	REMARKS
2-11	HEX. B/N	INCONEL ALLOY UNS.N06625	1		EA	M12x100L
2-10	SUPPORT BAR	SB 443 UNS.N06625 Gr.1	2		EA	t6
2-9	SUPPORT BAR	SB 443 UNS.N06625 Gr.1	2		EA	t6
2-8	SUPPORT ROD	SB 446 UNS.N06625 Gr.1	1		EA	ø19.05
2-7	SUPPORT ROD	SB 446 UNS.N06625 Gr.1	11		EA	ø6.35
2-6	SEAL STRIP	SB 443 UNS.N06625 Gr.1	2		EA	t6
2-5	SLIDING SHOE	SB 446 UNS.N06625 Gr.1	2		EA	ø31.75
2-4	BAFFLE	SB 443 UNS.N06625 Gr.1	15		EA	t6
2-3	BAFFLE	SB 443 UNS.N06625 Gr.1	16		EA	t6
2-2	BAFFLE	SB 443 UNS.N06625 Gr.1	1		EA	t10
2-1	BAFFLE	SB 443 UNS.N06625 Gr.1	1		EA	t10

Rev	Date	BY	Checked	Approved	Approved	Approved	DESCRIPTION
			HANIL		COMPANY		
04	09.10.'10	CORE-S.M.	J.C.KIM	H.KANG			FINAL
03	03.19'10	CORE-S.M.	J.C.KIM	H.KANG			APPROVAL FOR CONSTRUCTION
02	03.08.'10	CORE-S.M.	J.C.KIM	H.KANG			ISSUED FOR APPROVAL
01	02.17.'10	CORE-S.M.	J.C.KIM	H.KANG			ISSUED FOR APPROVAL
00	10.16.'09	CORE-S.M.	J.C.KIM	H.KANG			ISSUED FOR COMMENT

PARS OIL & GAS COMPANY
SOUTH PARS GAS FIELD DEVELOPMENT
PHASE-1 REVAMPING PROJECT

P.O.G.C.

SCALE: N/A

KMC I.G.C. HANIL

TITLE: 3E-0312 3E-0322 GAS COOLERS DETAIL OF TUBE BUNDLE (2/2)

DRAWING No.:	PROJ No.	Fac.	Area	Dis.	Doc.	Seq.	Rev.	Sheet No.
SP1-225-SPP1-00-VE-DL-010-901-04	SP1-225	SPP1	00	VE	DL	010	04	7/9

CAD FILENAME:

THE DESIGN OR PART THEREOF CONTAINED IN THIS DOCUMENT WAS DEVELOPED FOR SK FOR THE PROJECT AND REMAINS THE PROPERTY OF SK. ALL FLUOR PROPRIETARY INFORMATION OR UNDERLYING INTELLECTUAL PROPERTY UTILIZED IN THE CREATION OF THE DESIGN CONTAINED HEREIN SHALL REMAIN THE PROPERTY OF DAELIM.

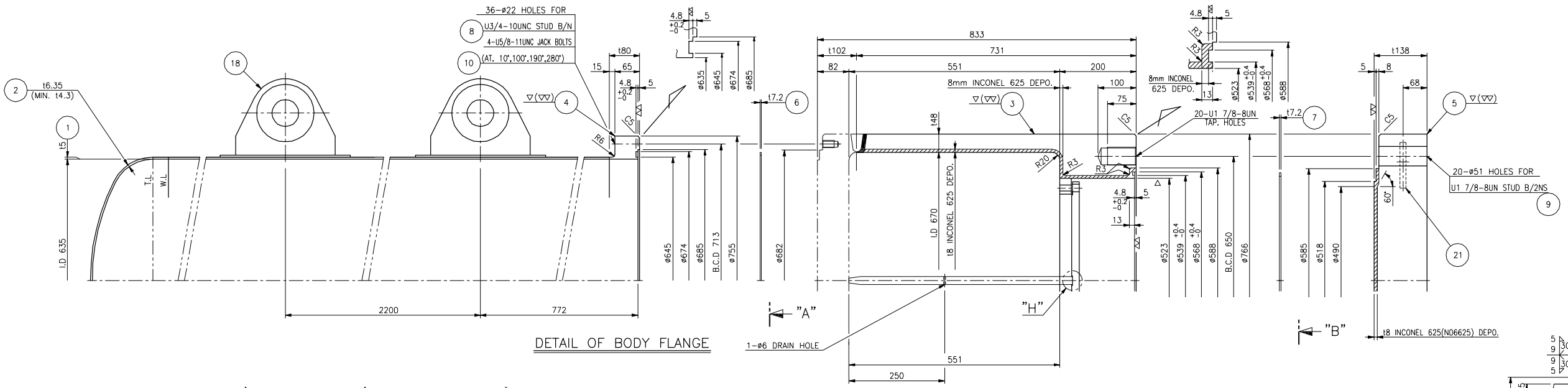

DETAIL OF BODY FLANGE

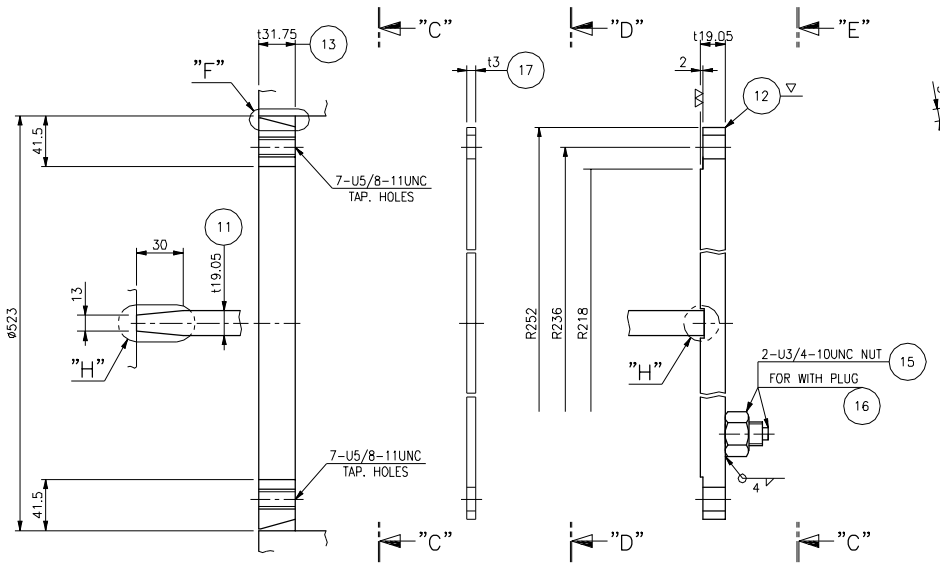

DETAIL OF PARTITION BOX COVER

DETAIL OF "C"
(FOR PARTITION BOX FLANGE)

DETAIL OF "D"
(FOR PARTITION BOX GASKET)

DETAIL OF "E"
(FOR PARTITION BOX COVER)

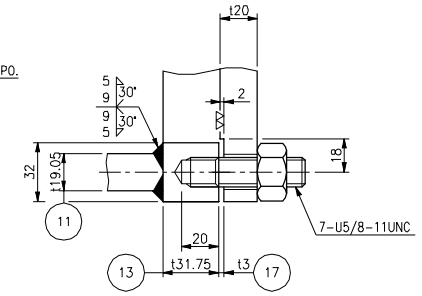

VIEW "Z"–"Z"

NOTE

1. GASKET MAT'L : SPIRAL WOUND GASKET (ALLOY N06625)+PTFE FILLED
2. GASKET MAT'L : METAL JACKET (ALLOY N06625)+PTFE FILLED

ITEM	NAME OF PART / PART CODE	MATERIAL	Q'TY	SPARE	UNIT	REMARKS
			Q'TY FOR 1 SET			
21	LIFTING LUG	SA516-70N	2		EA	t16
20	REINF. PAD	SB 443 UNS.N06625 Gr.1	2		EA	t6.35
19	LIFTING LUG	SA516-70N	4		EA	t13
18	LIFTING LUG	SA516-70N	2		EA	t16
17	GASKET	SEE NOTE 2.	1	1+1	EA	t3
16	PLUG	INCONEL ALLOY UNS.N06625	2		EA	U3/4-10UNC
15	NUTS	INCONEL ALLOY UNS.N06625	2		EA	U3/4-10UNC
14	STUD B/N	INCONEL ALLOY UNS.N06625	14	2+2	SETS	U5/8-11UNC x 65L
13	PASS PARTITION BOX FLANGE	SB 443 UNS.N06625 Gr.1	1		EA	t31.75
12	PASS PARTITION BOX COVER	SB 443 UNS.N06625 Gr.1	1		EA	t19.05
11	PASS PARTITION PLATE	SB 443 UNS.N06625 Gr.1	2		EA	t19.05
10	JACK BOLT	SA193-B8M CL.1	4		EA	U5/8-11UNC x 110L
9	STUD B/2NS	SA193-B7/SA194-2H PTFE COATED+PHOSPHATED	20	2+2	SETS	U1 7/8-8UN x 320L
8	STUD B/N	SA193-B7/SA194-2H PTFE COATED+PHOSPHATED	36	4+4	SETS	U3/4-10UNC x 130L
7	GASKET	SEE NOTE 1.	1	1+1	EA	t7.2
6	GASKET	SEE NOTE 1.	1	1+1	EA	t7.2
5	CHANNEL COVER	SA 765 Gr.2 + INCONEL 625(N06625) DEPO.(NOTE-24)	1		EA	t138
4	SHELL FLANGE	SB 564 UNS.N06625 Gr.1	1		EA	t80
3	CHANNEL BARREL	SA 765 Gr.2 + INCONEL 625(N06625) DEPO.(NOTE-24)	1		EA	ø766
2	SHELL HEAD	SB 443 UNS.N06625 Gr.1	1		EA	t6.35 (2:1 ELLIP.)
1	SHELL	SB 443 UNS.N06625 Gr.1	1		EA	t5

[1] SET TO BE MANUFACTURED

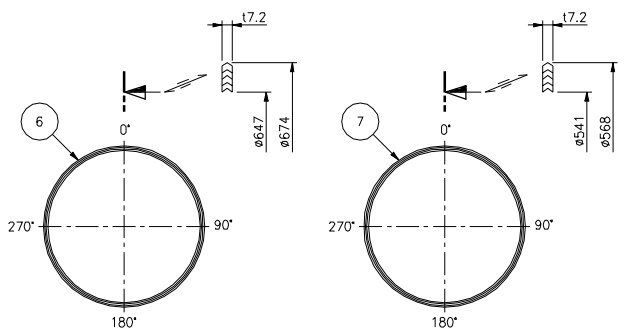

VIEW "A"

VIEW "B"

DETAIL OF GASKET

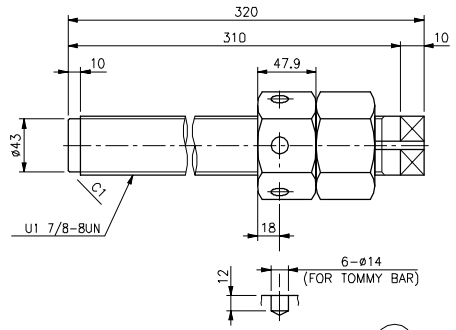

DETAIL OF STUD B/2NS

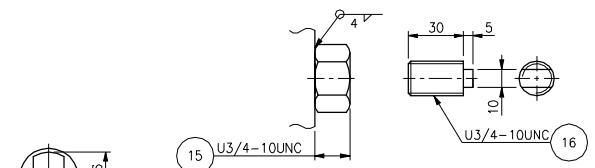

DETAIL OF NUT & PLUG
(FOR PARTITION BOX COVER SIDE)

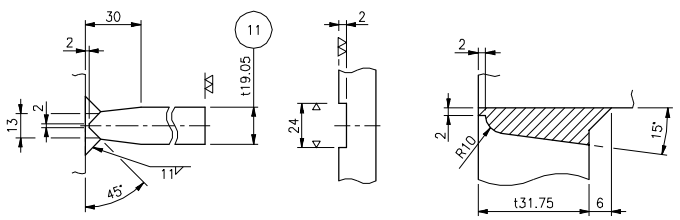

DETAIL OF "H"

DETAIL OF "F"

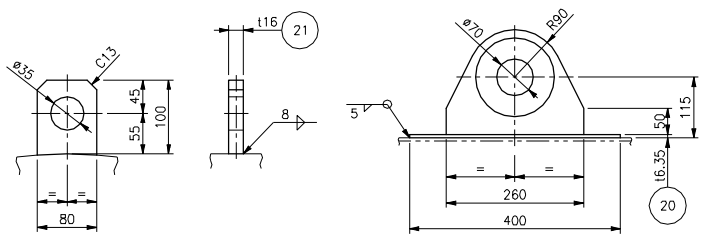

DETAIL OF LIFTING LUG
(FOR CHANNEL COVER SIDE)

DETAIL OF LIFTING LUG
(FOR SHELL SIDE)

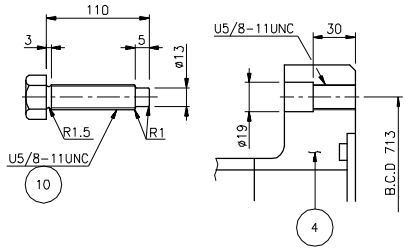

DETAIL OF JACK BOLT

FINAL

Rev	Date	BY	Checked	Approved	Approved	Approved	DESCRIPTION
		HANIL			COMPANY		
04	09.10.'10	CORE-S.M.	J.C.KIM	H.KANG			FINAL
03	03.19'10	CORE-S.M.	J.C.KIM	H.KANG			APPROVAL FOR CONSTRUCTION
02	03.08.'10	CORE-S.M.	J.C.KIM	H.KANG			ISSUED FOR APPROVAL
01	02.17.'10	CORE-S.M.	J.C.KIM	H.KANG			ISSUED FOR APPROVAL
00	10.16.'09	CORE-S.M.	J.C.KIM	H.KANG			ISSUED FOR COMMENT

PARS OIL & GAS COMPANY
SOUTH PARS GAS FIELD DEVELOPMENT
PHASE-1 REVAMPING PROJECT

P.O.G.C.

SCALE: N/A

KMC I.G.C. DAELIM

TITLE: 3E-0312 GAS COOLERS DETAIL OF BODY(1/2)

DRAWING No.:	PROJ No.	Fac.	Area	Dis.	Doc.	Seq.	Rev.	Sheet No.
SP1-225-SPP1-00-VE-DL-009-901-04	SP1-225	SPP1	00	VE	DL	009	04	4/9

CAD FILENAME:

THE DESIGN OR PART THEREOF CONTAINED IN THIS DOCUMENT WAS DEVELOPED FOR SK FOR THE PROJECT AND REMAINS THE PROPERTY OF SK. ALL FLUOR PROPRIETARY INFORMATION OR UNDERLYING INTELLECTUAL PROPERTY UTILIZED IN THE CREATION OF THE DESIGN CONTAINED HEREIN SHALL REMAIN THE PROPERTY OF DAELIM.

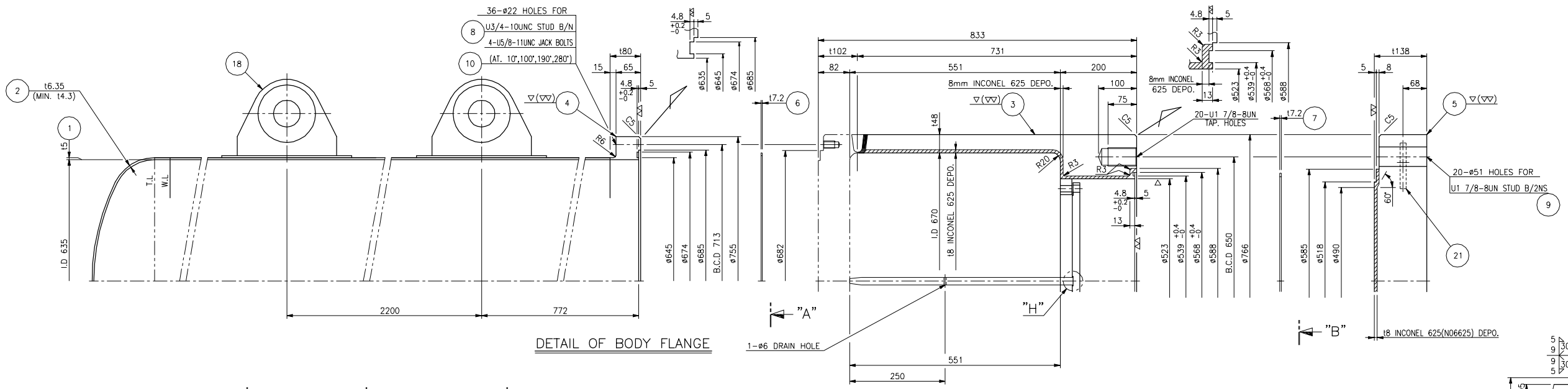

DETAIL OF BODY FLANGE

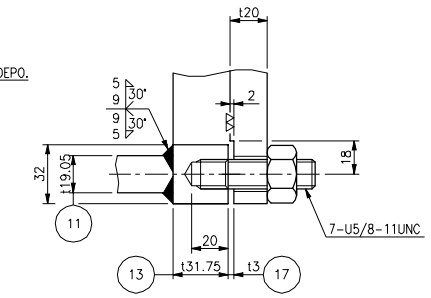

VIEW "Z"–"Z"

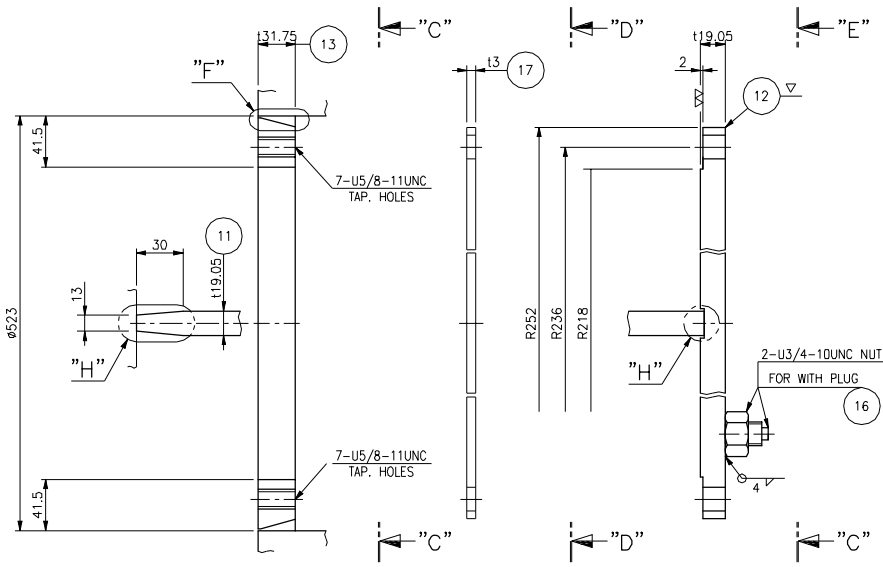

DETAIL OF PARTITION BOX COVER

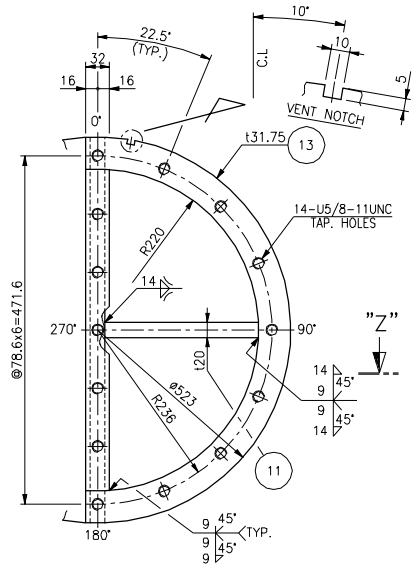

DETAIL OF "C"
(FOR PARTITION BOX FLANGE)

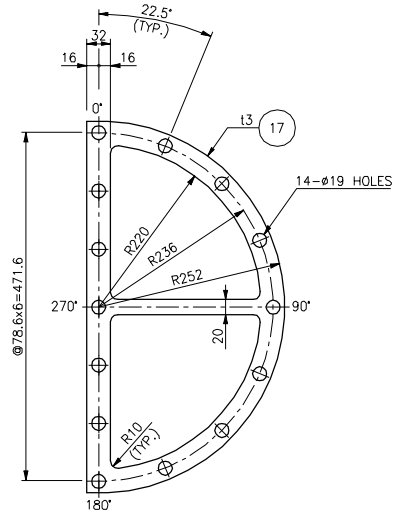

DETAIL OF "D"
(FOR PARTITION BOX GASKET)

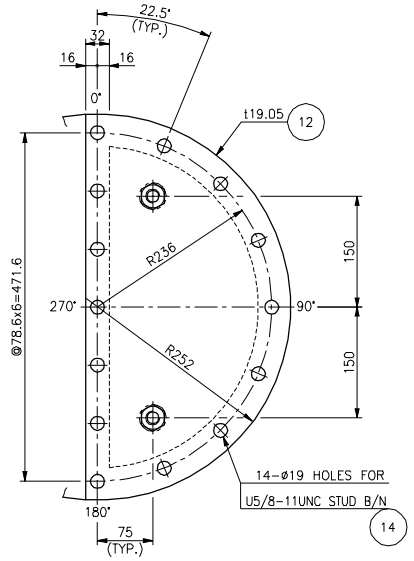

DETAIL OF "E"
(FOR PARTITION BOX COVER)

NOTE

1. GASKET MAT'L : SPIRAL WOUND GASKET (ALLOY N06625)+PTFE FILLED
2. GASKET MAT'L : METAL JACKET (ALLOY N06625)+PTFE FILLED

ITEM	NAME OF PART / PART CODE	MATERIAL	Q'TY	SPARE	UNIT	REMARKS
21	LIFTING LUG	SA516-70N	2		EA	t16
20	REINF. PAD	SB 443 UNS.N06625 Gr.1	2		EA	t6.35
19	LIFTING LUG	SA516-70N	4		EA	t13
18	LIFTING LUG	SA516-70N	2		EA	t16
17	GASKET	SEE NOTE 2.	1	1+1	EA	t3
16	PLUG	INCONEL ALLOY UNS.N06625	2		EA	U3/4-10UNC
15	NUTS	INCONEL ALLOY UNS.N06625	2		EA	U3/4-10UNC
14	STUD B/N	INCONEL ALLOY UNS.N06625	14	2+2	SETS	U5/8-11UNC x 65L
13	PASS PARTITION BOX FLANGE	SB 443 UNS.N06625 Gr.1	1		EA	t31.75
12	PASS PARTITION BOX COVER	SB 443 UNS.N06625 Gr.1	1		EA	t19.05
11	PASS PARTITION PLATE	SB 443 UNS.N06625 Gr.1	2		EA	t19.05
10	JACK BOLT	SA193-B8M CL.1	4		EA	U5/8-11UNC x 110L
9	STUD B/2NS	SA193-B7/SA194-2H PTFE COATED+PHOSPHATED	20	2+2	SETS	U1 7/8-8UN x 320L
8	STUD B/N	SA193-B7/SA194-2H PTFE COATED+PHOSPHATED	36	4+4	SETS	U3/4-10UNC x 130L
7	GASKET	SEE NOTE 1.	1	1+1	EA	t7.2
6	GASKET	SEE NOTE 1.	1	1+1	EA	t7.2
5	CHANNEL COVER	SA 765 Gr.2 + INCONEL 625(N06625) DEPO.(NOTE-2&)	1		EA	t138
4	SHELL FLANGE	SB 564 UNS.N06625 Gr.1	1		EA	t80
3	CHANNEL BARREL	SA 765 Gr.2 + INCONEL 625(N06625) DEPO.(NOTE-2&)	1		EA	ø766
2	SHELL HEAD	SB 443 UNS.N06625 Gr.1	1		EA	t6.35 (2:1 ELLIP.)
1	SHELL	SB 443 UNS.N06625 Gr.1	1		EA	t5

[1] SET TO BE MANUFACTURED

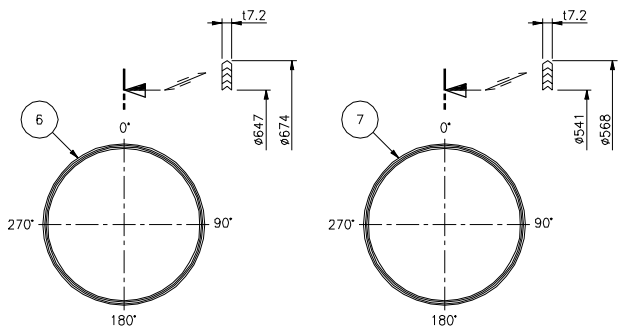

VIEW "A" VIEW "B"

DETAIL OF GASKET

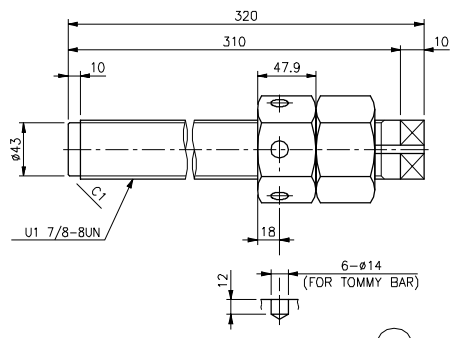

DETAIL OF STUD B/2NS

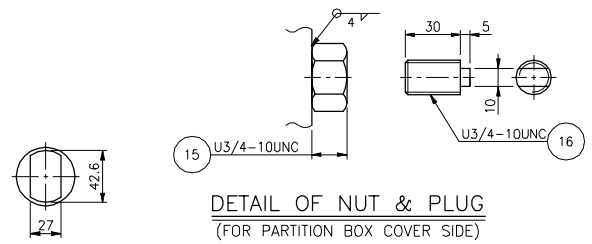

DETAIL OF NUT & PLUG
(FOR PARTITION BOX COVER SIDE)

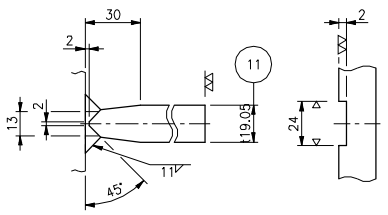

DETAIL OF "H"

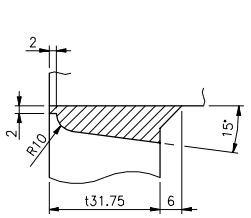

DETAIL OF "F"

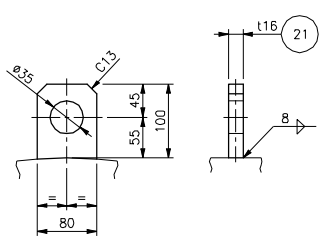

DETAIL OF LIFTING LUG
(FOR CHANNEL COVER SIDE)

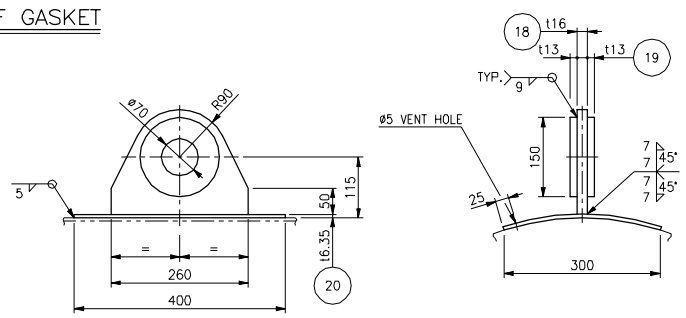

DETAIL OF LIFTING LUG
(FOR SHELL SIDE)

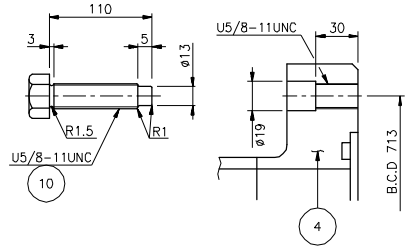

DETAIL OF JACK BOLT

FINAL

Rev	Date	BY	Checked	Approved	Approved	Approved	DESCRIPTION
04	09.10.'10	CORE-S.M.	J.C.KIM	H.KANG			FINAL
03	03.19'10	CORE-S.M.	J.C.KIM	H.KANG			APPROVAL FOR CONSTRUCTION
02	03.08.'10	CORE-S.M.	J.C.KIM	H.KANG			ISSUED FOR APPROVAL
01	02.17.'10	CORE-S.M.	J.C.KIM	H.KANG			ISSUED FOR APPROVAL
00	10.16.'09	CORE-S.M.	J.C.KIM	H.KANG			ISSUED FOR COMMENT
		HANIL			COMPANY		

PARS OIL & GAS COMPANY
SOUTH PARS GAS FIELD DEVELOPMENT
PHASE-1 REVAMPING PROJECT

P.O.G.C.

SCALE: N/A

KMC I.G.C. HANIL

TITLE: 3E-0322 GAS COOLERS DETAIL OF BODY(2/2)

DRAWING No.:	PROJ No.	Fac.	Area	Dis.	Doc.	Seq.	Rev.	Sheet No.
SP1-225-SPP1-00-VE-DL-009-901-04	SP1-225	SPP1	00	VE	DL	009	04	5/9

CAD FILENAME:

DATA SHEET
GLYCOL COOLERS
3-E-1113 – 3-E-1123

FINAL

REV	DATE	PREPARED	CHECKED	CONFIRMED	APPROVED	DESCRIPTION
		PROJECT MEMBER			PROJECT DIRECTOR	
D6	23 JUNE 2010	NAS	FH	HS		APPROVAL FOR CONSTRUCTION
D5	5 APRIL 2010	NAS	FH	HS		APPROVAL FOR CONSTRUCTION
D4	29 JAN 2010	NAS	FH	HS		APPROVAL FOR CONSTRUCTION
D3	6 NOV 2009	NAS	YSP	HS		ISSUE FOR APPROVAL
D2	7 OCT 2009	SK	OYM	HS		ISSUE FOR APPROVAL
D1	7 AUG 2009	SK	OYM	AK		ISSUE FOR COMMENT
D0	30 JULY 2009	CYX	OYM	AK		INTER DISCIPLINE CHECK

TABULATION OF REVISED PAGES

SHEET	REVISIONS									SHEET	REVISIONS								
	0	1	2	3	4	5	6	7			0	1	2	3	4	5	6	7	
1	X					X				46									
2	X									47									
3	X									48									
4	X		X		X					49									
5	X	X	X		X					50									
6	X	X	X		X					51									
7	X	X			X					52									
8	X	X	X		X					53									
9	X									54									
10	X		X		X					55									
11	X	X	X	X	X	X	X			56									
12	X	X	X	X	X	X	X			57									
13	X	X	X	X	X					58									
14	X	X		X						59									
15	X		X		X	X				60									
16	X		X		X		X			61									
17	X	X	X	X	X	X				62									
18		X		X	x	X				63									
19						X				64									
20						X	X			65									
21										66									
22										67									
23										68									
24										69									
25										70									
26										71									
27										72									
28										73									
29										74									
30										75									
31										76									
32										77									
33										78									
34										79									
35										80									
36										81									
37										82									
38										83									
39										84									
40										85									
41										86									
42										87									
43										88									
44										89									
45										90									

Table of Contents

1 INTRODUCTION 4
1.1 Project Outline Description 4
1.2 Scope of Work 5
1.3 Purpose of Document 5
1.4 Abbreviations 6
1.5 Definition of Terms 6
2 REFERENCES 8
2.1 SP1 Conceptual Study Project Documents 8
2.2 SP1 Revamping Project Documents 8
2.3 SP1 Revamping FEED Project Documents 8
2.4 Other SP1 Project Documents 9
2.5 Codes and Standards 10
3 GLYCOL COOLER DATA SHEET 11
3.1 Lean Tri Ethylene Glycol Composition 14
3.2 Nozzle Schedule 15
3.3 3-E-1113 & 3-E-1123 Unit Sketch 16
3.4 Refer to Note 2 and Note 28 16
3.5 Existing Saddle and Base Plate Dimensions for Reference 20

1 INTRODUCTION

1.1 Project Outline Description

The Project concerns the South Pars Gas Field Development Project Phase 1 (SPGFDP-1). The Phase 1 Complex is presented in Figure 1.1 below.

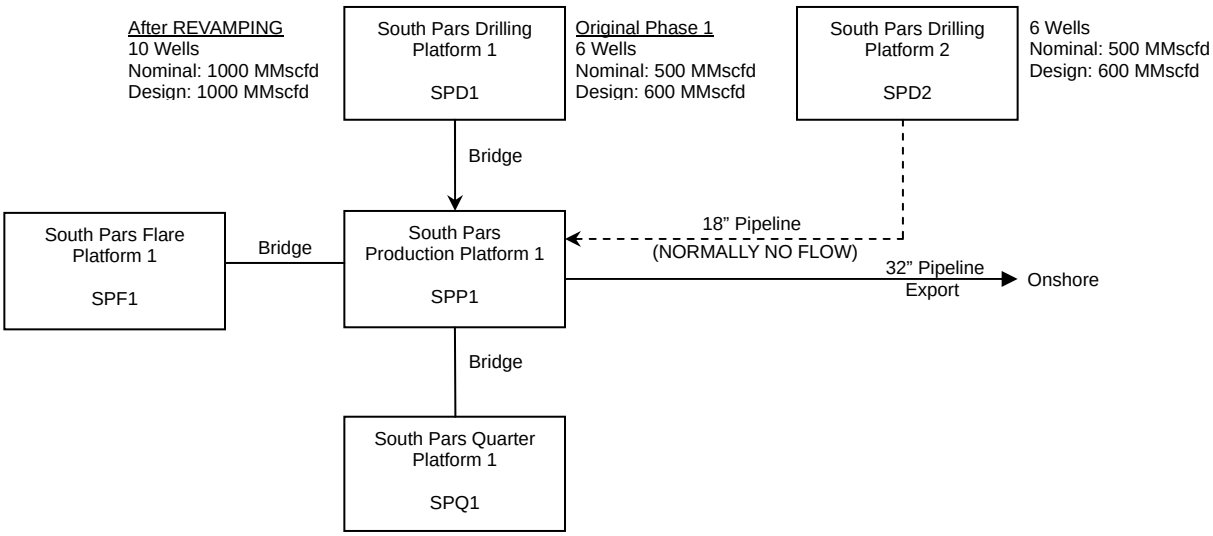

Figure 1.1: SPGFDP-1 Complex

The REVAMPING of offshore platforms deals with the changes necessary on SPP1 and SPD1 platform topsides and SPB1 bridge in between to raise the production from 800 MMSCFD (average current production assumed) to a minimum of 1000 MMSCFD, all the production coming now from SPD1. In the case of any lack/decrease of production from SPD1, a part of the production could be delivered from SPD2.

In parallel to the South Pars 1 project REVAMPING, well perforation and drilling activities on SPD1 will take place.

The main objective of the DETAILED DESIGN ENGINEERING is to prepare all the necessary technical documents, drawings, and scope of work required for the procurement, construction and installation of the EPCI contract for the REVAMPING of South Pars Project Phase 1.

1.2 Scope of Work

Well fluid production is delivered from wellhead platform (SPD1) to Central Production Platform SPP1). SPD2 could deliver production fluid to SPP1 in the event of SPD1 decrease in production. There will be ten well flowlines installed at SPD1 which are segregated to wellbay 1 and wellbay 2 after REVAMPING Project. Wellbay 2 consists of four new wells and relocation of ne existing well flowline from wellbay 1. The well fluid will then be routed to Central Production platform (SPP1) processing trains (Train 1 and 2) for separation of produced water and liquid condensate from the gas. The gas will be dehydrated to the required export quality at the Glycol contactor. Dehydration is accomplished by contacting gas with TEG. The TEG rich in water will e sent to the GRU where water is being stripped from the TEG and reused into the Glycol contactor. The separated liquid of condensate from the slug catcher (and other separator/column) is routed to condensate dewatering train to dewater the condensate before mixing it with the dehydrated gas to export.

Process revamping will be carried out on SPD1 and SPP1 platform to increase the production to 1000 MMSCFD. Main changes envisaged for SPGFDP-1 based on CONTRACT EXHIBIT A are outlined as follow:

- Internals change-out for Slug Catcher, Dehydration Inlet Separator and Glycol Contactor.
- Replace Gas Coolers and Condensate Coolers with suitable material to overcome corrosion issues.
- Additional pipe work to enable production from the new wellbay 2 at SPD1 to SPP1.
- Replace level control valves for condensate and produced water service.
- Addition of HIPS on new production header and new test header.
- Equipments in GRU are to be replaced or added in order to cater for the increase TEG circulation rate of 14.6 tonne/hr. Equipments involved in the revamping are namely Hot & Cold Glycol Plate Heat Exchanger, Glycol Cooler, Glycol Circulation Pump, Glycol Booster Pump, Charcoal Filter, Glycol Reboiler Heater and pipe work necessary to deliver TEG circulation rate of 14.6 tonne/hr.

1.3 Purpose of Document

The purpose of this document is to present the up-dated data for the replacement of Glycol Coolers 3-E-1113 & 3-E-1123, added in the frame of the South Pars Gas Field Development Phase 1 Revamping EPCI Project.

1.4 Abbreviations

EPCI	:	Engineering Procurement Construction Installation
FEED	:	Front End Engineering Design
FF	:	Flat Face
GRU	:	Glycol Regeneration Unit
MMSCFD	:	Million Standard Cubic Feet per Day
P&ID	:	Process & Instrumentation Diagram
PFD	:	Process Flow Diagram
RF	:	Raised Face
SP1	:	South Pars Offshore Platforms Phase 1
SPD1	:	South Pars Drilling Platform 1
SPD2	:	South Pars Drilling Platform 2
SPGFDP-1	:	South Pars Gas Field Development Project Phase 1
SPP1	:	South Pars Production Platform 1
TEG	:	Tri Ethylene Glycol

1.5 Definition of Terms

COMPANY	means PETROPARS Limited.
COMPANY DOCUMENTS	means all information, data, documents calculations, notes, data sheets, computer data, specifications, drawings, plans, sketches, procedures, letters, reports and the like to be provided by COMPANY to EPCI CONTRACTOR necessary for the performance of the SERVICES AND WORKS, including but not limited to, detail engineering dossier, basic engineering dossier, FEED Dossier, vendors' documentation and the like.
CONSULTANT	means the contractor which has undertaken and performed the FEED Engineering. DORIS Engineering (abbreviated DE) is the CONSULTANT.
EPCI CONTRACTOR	the contractor in charge of the engineering, procurement, construction and installation. IRAN INTERNATIONAL GENERAL CONTRACTOR COMPANY (IGC) is the EPCI Contractor.

LONG LEAD ITEM (LLI)	Means the item which its procurement/acquisition time is predicted to be longer than other required project equipment/materials.
PROJECT	SOUTH PARS GAS FIELD DEVELOPMENT PHASE 1 REVAMPING.
REVAMPING	Means all modifications on SPD1, SPP1, SPQ1 and SPD2 platforms and SPB1 & SPB2 bridges, necessary to bring the production of South Pars Gas Field Development Phase 1 offshore facilities to a production of 1000 MMSCFD.
SERVICES AND WORKS	means the work to be performed by EPCI CONTRACTOR under the CONTRACT for the full and complete realization of the PLANT, as described in detail in the CONTRACT EXHIBIT A – Scope of Work.
SUB-CONTRACTOR	means the contractor to whom the CONTRACT has been awarded to undertake and perform the DETAILED ENGINEERING SERVICES AND WORKS. POYRY Energy Sdn. Bhd. is the sub-contractor.
VENDOR	means the manufacturer and/or supplier of a commodity, system or piece of equipment to perform the specified duty.

2 REFERENCES

2.1 SP1 Conceptual Study Project Documents

Not applicable.

2.2 SP1 Revamping Project Documents

Reference	Title
[1] SP1-225-0000-00-PI-SP-100	Addendum to Specification for Piping Material
[2] SP1-225-0000-00-PI-SP-104	Addendum to Specification for Painting and Coating
[3] SP1-225-0000-00-PI-SP-111	Addendum to Specification for Thermal Insulation
[4] SP1-225-0000-00-PR-DB-001	Process Design Basis
[5] SP1-225-0000-00-VE-SP-102	Addendum to Minimum Requirements for Heat Exchangers
[6] SP1-225-SPP1-00-PR-PI-140	P&ID Central Processing Platform SPP1 – Glycol Regeneration Package (Train 1) Sht 4 / 5
[7] SP1-225-SPP1-00-PR-PI-141	P&ID Central Processing Platform SPP1 – Glycol Regeneration Package (Train 2) Sht 4 / 5
[8] SP1-225-0000-00-VE-SP-100	Addendum to Minimum Requirements for Pressure Vessels
[9] SP1-225-SPP1-00-PR-RT-003	TEG Gas Dehydration Revamp Process Design Verification Report.

2.3 SP1 Revamping FEED Project Documents

Reference	Title
[10] SP1-25-SPP1-00-ME-DT-415 Rev B2	Data Sheet Glycol Cooler 3-E-1113 - 3-E-1123

2.4 Other SP1 Project Documents

Reference	Rev	Title
[11] SP1-220-0000-00-PE-DB-100	**D4 Re-AFD**	Environmental Conditions Design Basis
[12] SP1-220-0000-00-PI-SP-100	**D5 Re-AFD**	Specification for Piping Material
[13] SP1-220-0000-00-PI-SP-104	**D3 AFD**	Specification for Painting and Coating
[14] SP1-220-0000-00-PI-SP-111	**D1 IFA**	Thermal Insulation
[15] SP1-220-0000-00-VE-SP-100	**D3 AFD**	Minimum Requirements for Pressure Vessels
[16] SP1-220-0000-00-VE-SP-102	**D3 Re-AFD**	Minimum Requirements for Heat Exchangers
[17] SP1-220-0000-00-VE-SP-103	**D2 AFD**	Allowable Nozzle Loads for Vessels, Columns and Exchangers
[18] Standard drawings		
5270-0-STC-000-400-102		Tolerances - Horizontal Vessels
S 42-114		Nameplates & Bracket for Tubular Heat Exchanger (John Brown Standard)
5270-0-STC-000-400-202-A		Projection of Nozzles
5270-0-STC-000-400-202-B		Bolt-Hole Orientation of Nozzle
5270-0-STC-000-400-505A (Rev. 1)		Earth-Boss Assembly
5270-0-STC-000-400-512		Schedule - CS/SS/Clad
5270-0-STC-000-600-120		Support Saddle for Horizontal Exchangers
5270-0-STC-000-600-136		Lifting Rings and Pull Rods
5270-0-STC-000-600-145		Jack Screw and Stop Centering Pin
5270-0-STC-000-600-601		Gasket Seam Orientation
5270-0-STC-000-400-501-2		Hot Insulation Support (Horizontal Vessels)

2.5 Codes and Standards

Unless otherwise stipulated, the version of these documents that the VENDOR shall consider applicable is the latest revision published at the EFFECTIVE DATE of the EPCI CONTRACT including relevant appendices and supplements.

The following codes and standards have been used in their updated version (at the commencement of the Revamping Project).

Reference	Title
[19] ASME VIII Div 1 (2007)	Rules for Construction of Pressure Vessels (Latest Edition and Addenda)
[20] EN 10204	Metallic Product – Type of Inspection Documents (Latest Edition).
[21] TEMA	Standard of Tubular Exchanger Manufacturers Association (Latest Edition)
[22] API 660	Shell & Tube Heat Exchangers (Latest Edition)
[23] NACE MR0175	Petroleum and Natural Gas Industries—Materials for use in H2S Containing Environments in Oil and Gas Production

3 GLYCOL COOLER DATA SHEET

GLYCOL COOLERS 3-E-1113 & 3-E-1123 DATA SHEET

1	OVERALL SIZE	418 x 4500 mm **(NOTE 1)**	TYPE		BEU (TEMA)		POSITION		HORIZONTAL	
2	SURFACE PER UNIT (Gross/Eff)	39.93/38.37 m^2 **(NOTE 2)**	SHELLS PER UNIT		1		SURFACE PER SHELL (Gross/Eff)		39.93/38.37 m^2 **(NOTE 2)**	
3	N° OF UNITS	2 x 100% **(NOTE 3)**	SHELL ARRANGEMENT		NA		BUNDLE WEIGHT		626.53 kg **(NOTE 2)**	
4	UNIT DRY WEIGHT	1500 kg **(NOTE 2)**	UNIT OPERATING WEIGHT		2300 kg **(NOTE 2)**		UNIT TESTING WEIGHT		2077.52 kg **(NOTE 2)**	
	PERFORMANCE OF ONE SHELL (NOTE 4, NOTE 5 & NOTE 6)									
5			Summer Case				Winter Case (**NOTE 6**)			
6		Units	TUBE SIDE		SHELL SIDE		TUBE SIDE		SHELL SIDE	
7	FLUID CIRCULATED		Sea water **(NOTE 7)**		Lean TEG **(NOTE 7)**		Sea water **(NOTE 7)**		Lean TEG **(NOTE 7)**	
8	DESIGN FLOWRATE	kg/h	25792.80		14600		24835.80		14600	
9			IN	OUT	IN	OUT	IN	OUT	IN	OUT
10	OPERATING TEMPERATURE	°C	30.0	39.7	80.8	50.9	13.0	25	73.3	36.9
11	OPERATING PRESSURE	bar g	5.0	4.7	5.3	4.8	5.0	4.0	5.3	4.8
12	TEG LIQUID - FLOW RATE	kg/h			14600	14600			14600	14600
13	- DENSITY	kg/m^3			1075.5	1099.3			1081.5	1110.3
14	- MASS HEAT CAPACITY	kJ/kg°C			2.374	2.223			2.335	2.153
15	- VISCOSITY	cP			6.147	12.654			7.200	19.707
16	- THERMAL CONDUCTIVITY	W/m°C			0.195	0.194			0.195	0.194
17	WATER - FLOW RATE	kg/h	25792.80	25792.80			24835.80	24835.80		
18	- DENSITY	kg/m^3	1021	1018.4			1025.6	1022.3		
19	- MASS HEAT CAPACITY	kJ/kg°C	4.006	4.015			3.998	4.005		
20	- VISCOSITY	cP	0.858	0.740			1.26	1.01		
21	- THERMAL CONDUCTIVITY	W/m°C	0.6145	0.6250			0.5864	0.6044		
22	VAPOUR - FLOW RATE	kg/h								
23	- DENSITY	kg/m^3								
24	- MASS HEAT CAPACITY	kJ/kg°C								
25	- VISCOSITY	cP								
26	- THERMAL CONDUCTIVITY	W/m°C								
27	- MOLECULAR WEIGHT	g/mol								
28	NUMBER OF PASSES		4		1		4		1	
29	PRESSURE DROP (Allowable / Calculated)	bar	1.0 / 0.18		0.3 / 0.09		1.0 / 0.18		0.3 / 0.10	
30	FOULING RESISTANCE	m^2°C/W	0.00029		0.00041		0.00029		0.00041	
31	TYPE OF CLEANING MAINTENANCE									
32	HEAT EXCHANGED	kW	**279**				**332**			
33	TRANSFER RATE **(NOTE 2)**	W/m^2 °C	SERVICE	272	CLEAN	444	MTD (corrected)		31.7 °C **(NOTE 2)**	
	CONSTRUCTION DATA OF ONE SHELL (NOTE 2 to NOTE 14)									
34	DESIGN PRESSURE	bar g	14		FV / 10.35					
35	TEST PRESSURE		AS PER CODE		AS PER CODE					
36	DESIGN TEMPERATURE	°C	0/100		0/100					
37	MIN. DESIGN TEMPERATURE / AT PRESSURE OF		°C / bar g		°C / bar g					
38	CORROSION ALLOWANCE / CLAD	mm	- (tubes) / - (channel)		3.0 / -					
39	RATING AND FACING		see page 14		see page 14					
40	PIPING LINES INLET / OUTLET	in	3" / 3"		3" / 3"					
41	NOZZLES INLET / OUTLET	in	see page 14		see page 14					
42	NOZZLES VENT / DRAIN	in	**(NOTE 4)**		**(NOTE 4)**					

43	TUBES	N° 71 U	OD	19.05 mm	THK	1.0 mm	LENGTH	4500 mm	PITCH	25.4 mm	LAYOUT	60 deg
44	SHELL	ID	430 mm	CROSS BAFFLES	N° 26	TYPE: Single seg.	20.5% CUT	SPACING	150 mm	INLET	275 mm	

45	**MATERIAL (NOTE 17)**			
46	TUBES (MIN. WALL TUBE & SMLS) (NOTE 18 & NOTE 19)	90-10 Cu-Ni - SB111-C70600-O61	CROSS BAFFLES AND SUPPORT PLATES	90-10 Cu-Ni (th min= 5 mm)
47	SHELL / SHELL HEAD	A516 Gr. 70	PARTITION PLATE	90-10 Cu-Ni
48	CHANNEL	90-10 Cu-Ni- C70600	SHELL COVER (Rear End)	
49	TUBE SHEET	90-10 Cu-Ni- C70600	SHELL COVER FLANGE (Rear End)	
50	SHELL NOZZLE FLANGES	A105	SHELL BODY FLANGE	A105
51	CHANNEL NOZZLE FLANGES/FORGINGS	90-10 Cu-Ni- C70600	CHANNEL BODY FLANGE	90-10 Cu-Ni- C70600
52	INTERNAL BOLTS / NUTS	90-10 Cu-Ni / 90-10 Cu-Ni	CHANNEL COVER FLANGE	90-10 Cu-Ni- C70600
53	SUPPORT SADDLES	same as shell	FLOATING HEAD COVER /	NA
54	Tube/ Tubesheet Joint :	Welded & rolled **(NOTE 17)**	FLOATING HEAD BACKING DEVICE	NA
55	IMPINGEMENT PROTECTION : Rectangular plate		FLOATING HEAD TUBE SHEET	NA
56	SIDES CHANGE ALLOWABLE : No		FLOATING HEAD COVER FLANGE	NA
57	ADDITIONAL AREA REQUIRED / ACTUAL	10 / 10 % **(NOTE 5)(Included)**	GASKETS	**(NOTE 9)**
58	INSULATION SHELL 20 mm CHANNEL 0 mm **(NOTE 15)**		EXTERNAL SHELL STUD BOLTS	A193 B7 **(**NOTE 22**)**
59	☐ ISPESL – VSR ☑ ASME VIII – DIV.1		EXTERNAL SHELL NUTS	A194 2H **(**NOTE 22**)**
60	TEMA: ☑ "R" ☐ "B" ☐ "C"		EXTERNAL CHANNEL STUD BOLTS	A193 B7 **(**NOTE 22**)**
61	PAINTING	YES **(NOTE 16)**	EXTERNAL CHANNEL NUTS	A194 2H **(**NOTE 22**)**
62	HEAT TREATMENT (per code) channel / shell	**(NOTE 17)**	SHELL NOZZLE NECK	A106 GR.B
63	RADIOGRAPHY channel / shell	100% / 100%	CHANNEL NOZZLE NECK	90-10 Cu-Ni- C70600
64	WELD JOINT EFFICIENCY channel / shell	1.0 / 1.0	TIE RODS	90-10 Cu-Ni

NOTES

NOTE 1 Because of layout restriction, the maximum overall length available is 5350 mm.

NOTE 2 Thermal guarantee and mechanical guarantee to be given by VENDOR (including vibration assessment). All dimensions and weights to be confirmed or calculated by VENDOR (per Code). Deviations shall be submitted to COMPANY for approval.
Exchangers shall comply with **ASME VIII Div 1** (Ref. [19]), **TEMA** (Ref. [21]), **API 660** (Ref. [22]), NACE MR0175, **SP1-220-0000-00-VE-SP-100** (Ref. [15]), **SP1-225-0000-00-VE-SP-100** (Ref. [8]), **SP1-220-0000-00-VE-SP-102** (Ref. [16]) & **SP1-225-0000-00-VE-SP-102** (Ref. [5])

NOTE 3 One cooler per train: 3-E-1113 for train 1 and 3-E-1123 for train 2. Given flowrates are for one shell.

NOTE 4 Vent and drain valves for tube side are provided on piping by EPCI CONTRACTOR.
Vent and drain for shell side are provided by VENDOR at high and low points.
Pressures and temperature connections, if required, are provided on the adjacent piping by EPCI CONTRACTOR.
Shell side safety device is currently provided on the outlet piping. Tube side pressure safety valve is currently provided on the inlet piping.
VENDOR shall indicate and provide others connections on the exchanger if required.
Shell shall be insulated as defined in **SP1-225-0000-00-PI-SP-111** (Ref. [3]).
Vendor Shall include Pressure Equipment Regulations 1999.

NOTE 5 Minimum design margin of 10% on heat exchange surface shall be included.

NOTE 6 Design case is case 3 (Rich, Summer, Year 1). Case 1 (Rich, Winter, Year 1).

NOTE 7 Tube side fluid is sea water. Refer to **SP1-225-0000-00-PR-DB-001** (Ref. [4]) for fluid composition.
Shell side fluid is Tri Ethylene Glycol. Refer to section 3.1 on page 14.

~~**NOTE 8** Sea water flowrate for winter case shall be equal to flowrate for summer case. Calculated temperature with sea water flowrate equal to flowrate for summer case. VENDOR to confirm.~~
Process parameters of the Glycol Cooler will not be the same for summer and winter case.

NOTE 9 For shell side nozzles use of flat gasket, following piping class D1B per **SP1-220-0000-00-PI-SP-100** (Ref. [12]) and **SP1-225-0000-00-PI-SP-100** (Ref. [1]).
For tube side nozzles use of flat gasket, following piping class T1A per **SP1-220-0000-00-PI-SP-100** (Ref. [12]) and **SP1-225-0000-00-PI-SP-100** (Ref. [1]).
Type of gasket on body flanges shall be advised by VENDOR, preferably spiral wound gasket or metal jacketed gasket.

NOTE 10 Unless otherwise indicated, all flanges holes shall be staggered to main axes of vessel.

NOTE 11 The following parts are included in the supply:

- Blind flanges
- Complete sets of gaskets: 1 operating + 2 spares.
- Stud-bolts and nuts for girth flanges and blind nozzles (increased by 10% and not less than 4 pieces) of each type for spare bolting.
- Internal and external parts welded to the shell.
- Lifting devices, name plates, earthing bosses.
- Heat exchanger saddles shall be included in the supply.
- Pulling bolts, jack screw.
- Sufficient lifting lugs shall be provided for shell, tube side & tubesheet.
- Stiffening rings to be added if required (eg: Full Vacuum condition)

NOTE 12 For all materials: Reception, inspection and manufacturing shall be fully in accordance with **ASME VIII Div 1** (Ref. [19]).

NOTE 13 Nozzle loads per **SP1-220-0000-00-VE-SP-103** (Ref. [17]) shall be checked.
For seismic and wind data refer to **SP1-220-0000-00-PE-DB-100** (Ref. [11]).

NOTE 14 The exchanger and its saddles shall be checked with a horizontal acceleration of 0.15g and a vertical acceleration of 0.075g as per **SP1-220-0000-00-PE-DB-100** (Ref. [11]).

NOTES

NOTE 15 Insulation as per **SP1-225-0000-00-PI-SP-111** (Ref. [3]) & **SP1-220-0000-00-PI-SP-111** (Ref. [14]).

NOTE 16 Painting to be in accordance with Project specifications: **SP1-225-0000-00-PI-SP-104** (Ref. [2]) and **SP1-220-0000-00-PI-SP-104** (Ref. [13]).

NOTE 17 Material traceability, inspection, certifying authority and NDT as per **SP1-220-0000-00-VE-SP-100** (Ref. [15]), **SP1-225-0000-00-VE-SP-100** (Ref. [8]), **SP1-220-0000-00-VE-SP-102** (Ref. [16]) & **SP1-225-0000-00-VE-SP-102** (Ref. [5])

NOTE 18 Tube plate design conditions:

1. Normal operating conditions
2. Tube side circuit failure
3. Shell side circuit failure
4. Hydrotest shell side only
5. Hydrotest tube side only

NOTE 19 U-tube bend ROB > 1.5 x (tube OD), first and second rows of U-tubes require 16 BWG Thk. Tubes to allow for thinning. Solution annealed shall be performed for all **U-bends** after bending.

NOTE 20 3-E-1113 & 3-E-1123 are mirror sided, i.e.nozzles for 3-E-1123 shall be as represented and for 3-E-1113, N1 nozzle shall be at 210° and N2 nozzle shall be at 330°.

NOTE 21 In expansion direction, fixation holes shall be slotted.

NOTE 22 Bolting shall be as per **SP1-220-0000-00-PI-SP-100** (Ref. [12]) and **SP1-225-0000-00-PI-SP-100** (Ref. [1]).

NOTE 23 Flanges and tubesheets shall be ultrasonically tested in accordance with ASME SA388.

NOTE 24 Non-destructive test shall be as following:

Radiography	- 100% X-Ray all pressure part butt-welds and inner bore welded (if any) for both channel and shell
Ultrasonic Testing	- 100% all nozzle attachment welds
	- All forging > 50 mm thk. to ASTM 388
	- All plates > 50 mm thk. to ASTM 578 level B
	- All pipes > 25 mm thk. SA577 / 578
	- Claded plates plates to ASTM SA 578 level S6
MPI / DPI	- 100% all structural attachment welds
Tube end leak tests	- Yes, during shop hydrotest
-Helium leak test	
-100% NDT tube/ tube sheet joints	

NOTE 25 Earth bosses, pullings bolts, name plate bracket, jack screw, lifting lugs shall be as defined in **Standard Drawings** (Ref. [18]).

NOTE 26 All NDT shall be carried out before and after PWHT.

NOTE 27 Traceability of material shall be through certificates EN 10204 type 3.1.

NOTE 28 Saddle location shall be fixed as per existing saddle location. Set plan bolts / mounting bolts location and base plate shall be as per existing cooler base plate. VENDOR need to follow the existing dimension for these two items as per clouded dimensions as per Section 3.4 **(Refer to General Arrangement of existing Glycol Cooler 3-E-1113/1123).**

3.1 Lean Tri Ethylene Glycol Composition

Stream Number	19
Description	Cold Glycol HEX Outlet
Component Molar Fraction	
Methane	0.0011
Ethane	0.0001
Propane	0.0001
i-Butane	0.0000
n-Butane	0.0000
i-Pentane	0.0000
n-Pentane	0.0000
Mcyclopentan	0.0000
Benzene	0.0000
n-Hexane	0.0000
Cyclohexane	0.0000
Mcyclohexane	0.0000
Toluene	0.0000
n-Heptane	0.0000
n-Octane	0.0000
o-Xylene	0.0001
n-Nonane	0.0000
123-MBenzene	0.0000
n-Decane	0.0000
n-C11	0.0000
C12-C16*	0.0000
C17-C21*	0.0000
C22+*	0.0000
Nitrogen	0.0001
CO2	0.0001
H2S	0.0001
COS	0.0000
M-Mercaptan	0.0000
E-Mercaptan	0.0000
nPMercaptan	0.0001
nBMercaptan	0.0001
H2O	0.0064
TEG	0.9918

3.2 Nozzle Schedule

MARK	QTY	DESIGNATION	Nozzle Proj from Vessel CL		FLANGES			
				NPS	TYPE	SCH	CLASS.	FACE
N4	1	TEG Inlet	420	3	WN	160	150	RF
N3	1	TEG Outlet	420	3	WN	160	150	RF
N1	1	Sea Water Inlet	420	3	WN	XS	150	FF
N2	1	Sea Water Outlet	420	3	WN	XS	150	FF
N5B	1	Drain c/w Blind	400	2	WN	160	150	FF
N5A	1	Vent c/w Blind	400	2	WN	160	150	FF
N6B	1	Drain	420	2	WN	160	150	RF
N6A	1	PS	420	2	WN	160	150	RF

Note:

1) Reinforced opening, including nozzle OD, nozzle neck thickness, re-pad size and thickness to be confirmed by the Vendor.

3.3 3-E-1113 & 3-E-1123 Unit Sketch

3.4 Refer to Note 2 and Note 28

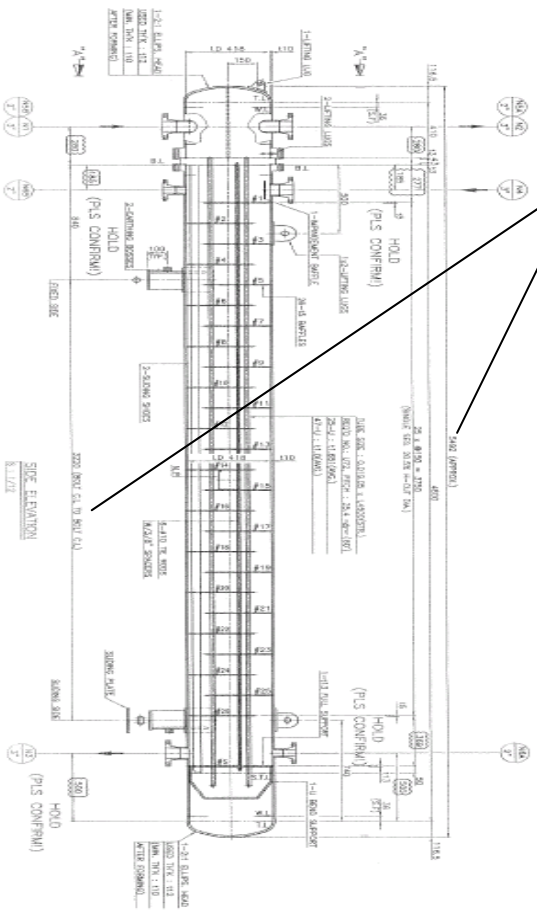

Overall Dimension = 5492 mm (Approx)

Bundle Pull-out Length = 5000 mm (Max)

All thicknesses specified are provisional, and equipment vendor is responsible to confirm for compliance with Code and Standard.

IMPORTANT:

a) Distance between fixed and sliding saddle shall be maintained at 3220 mm as per the existing exchanger.
b) Saddle distance to the shell head is to be confirmed by HANIL.

SIDE VIEW

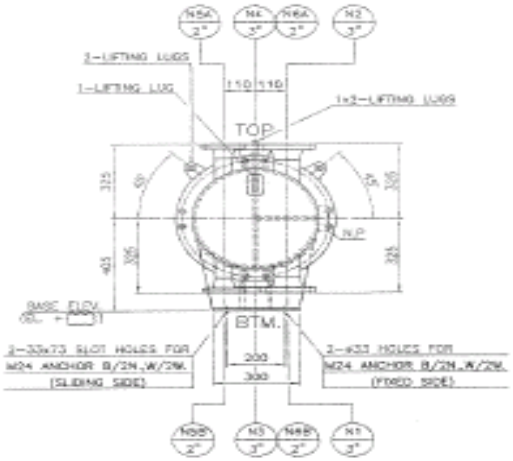
2-LIFTING LUGS
1-LIFTING LUG
1x2-LIFTING LUGS
TOP
BTM.
BASE ELEV.
2-33x73 SLOT HOLES FOR
M24 ANCHOR B/2N.W/2N.
(SLIDING SIDE)
2-Ø33 HOLES FOR
M24 ANCHOR B/2N.W/2N.
(FIXED SIDE)
VIEW "A"-"A"
S : 1/12

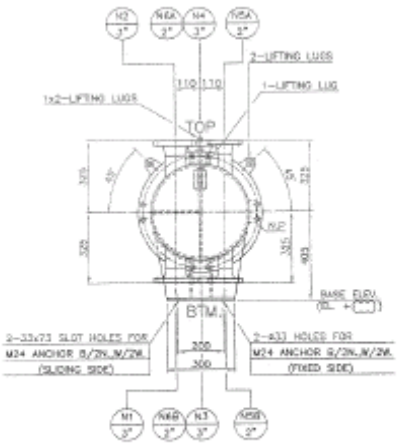
2-LIFTING LUGS
1-LIFTING LUG
1x2-LIFTING LUGS
TOP
BTM.
BASE ELEV.
2-33x73 SLOT HOLES FOR
M24 ANCHOR B/2N.W/2N.
(SLIDING SIDE)
2-Ø33 HOLES FOR
M24 ANCHOR B/2N.W/2N.
(FIXED SIDE)
VIEW "A"-"A"
S : 1/12

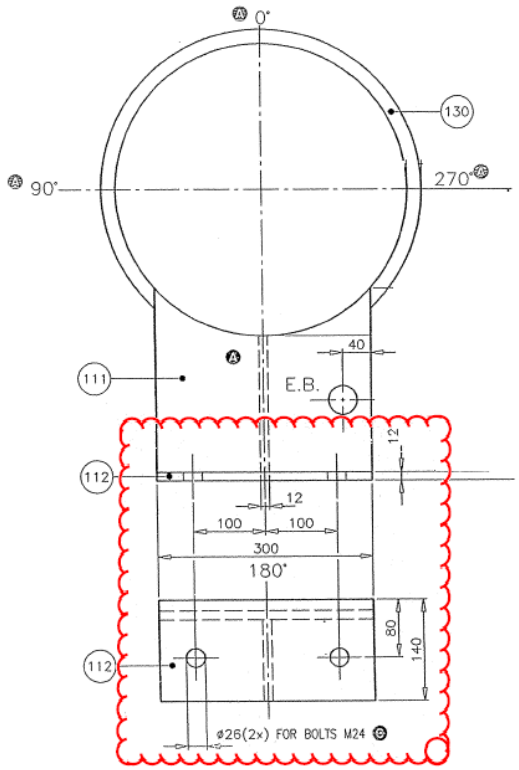

Fixed Saddle – Existing Design

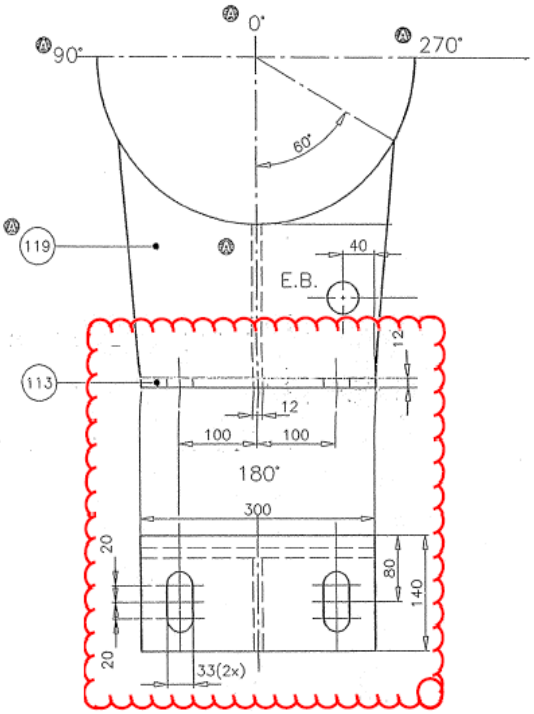

Sliding Saddle – Existing Design

IMPORTANT:

a) **Equipment vendor has to ensure that saddle design is as per the existing heat exchanger so as to utilize the existing footing for the new heat exchanger support.**

Refer to NOTE 20

MAXIMUM ALLOWABLE OVERALL DIMENSIONS

Based on HANIL drawings.

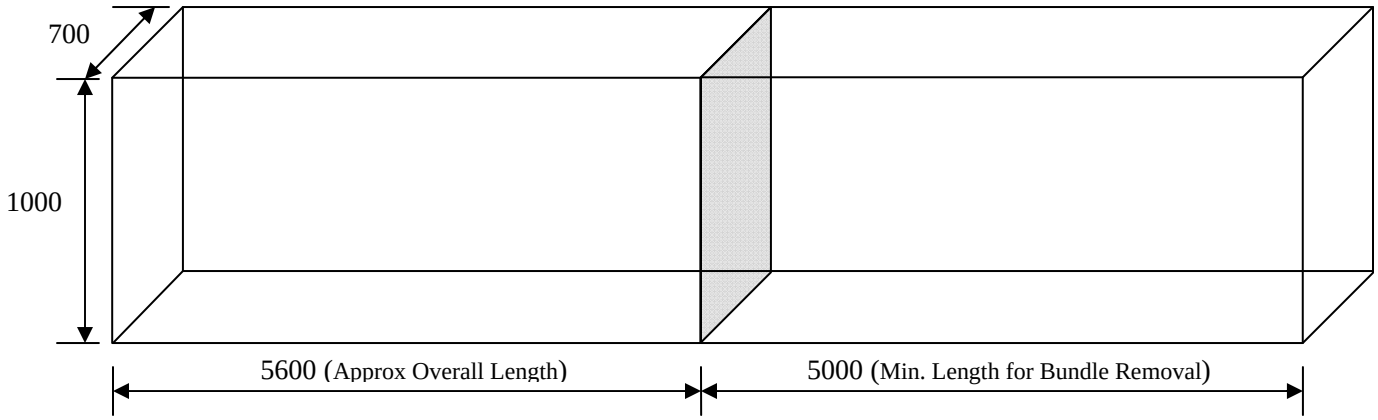

3.5 Existing Saddle and Base Plate Dimensions for Reference

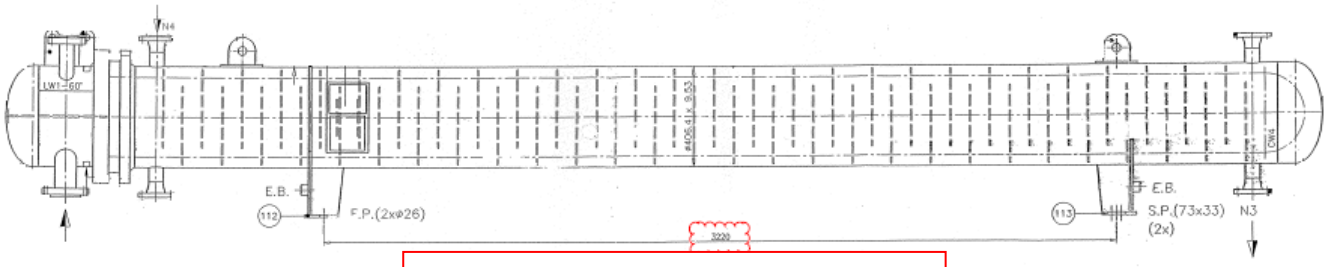

Distance between saddles is 3220 mm as per Hanil Latest G.A Drawing No. VP-3-E-1113-001

Refer to NOTE 21 & 28

THE DESIGN OR PART THEREOF CONTAINED IN THIS DOCUMENT WAS DEVELOPED FOR SK FOR THE PROJECT AND REMAINS THE PROPERTY OF SK. ALL FLUOR PROPRIETARY INFORMATION OR UNDERLYING INTELLECTUAL PROPERTY UTILIZED IN THE CREATION OF THE DESIGN CONTAINED HEREIN SHALL REMAIN THE PROPERTY OF DAELIM.

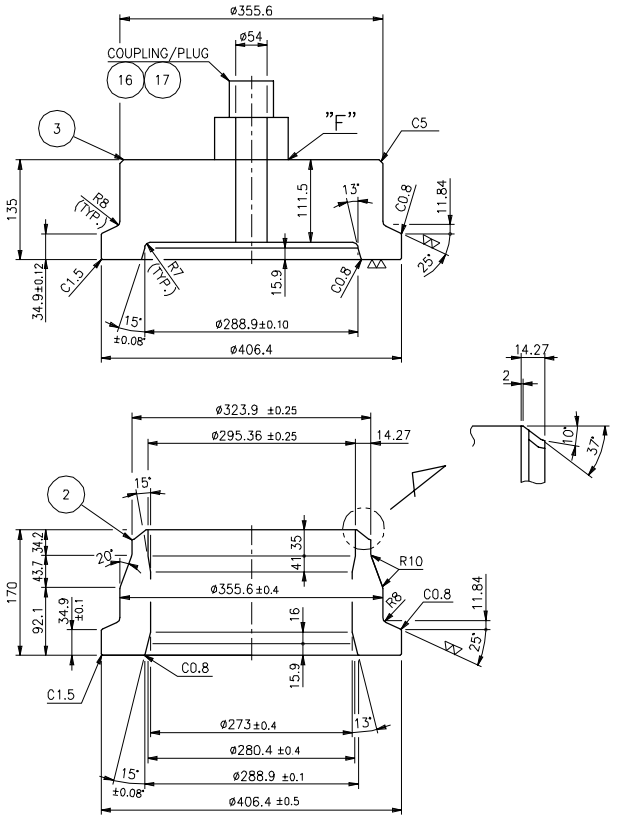

N1 12" N2 12" NOZZLES

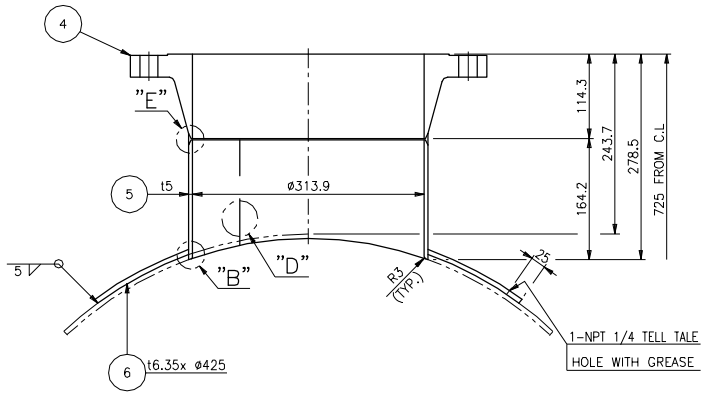

N3 12" N4 12" NOZZLES

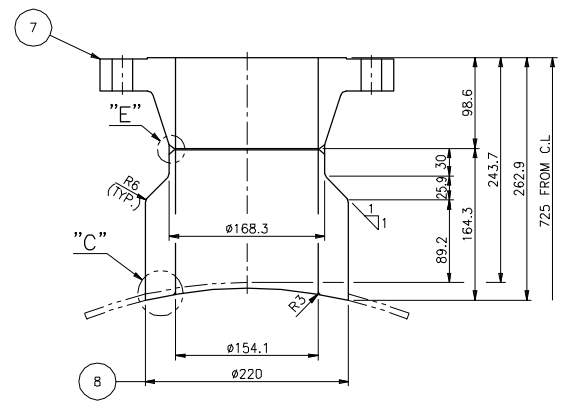

N5 6" N6 6" NOZZLES

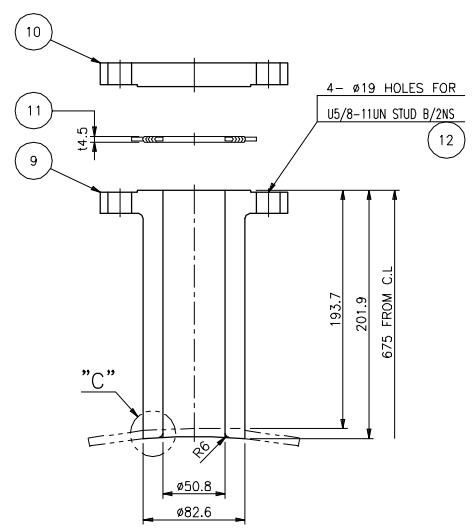

N7 2" N8 2" NOZZLES

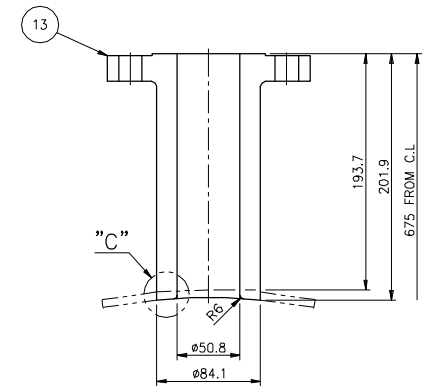

N9 2" NOZZLE

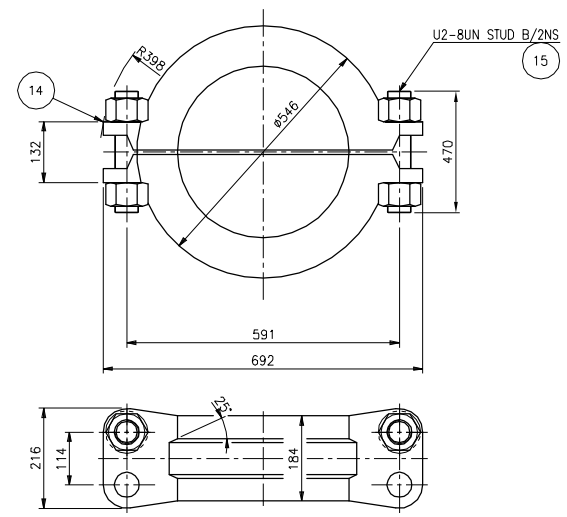

G-LOK CLAMPS DETAIL

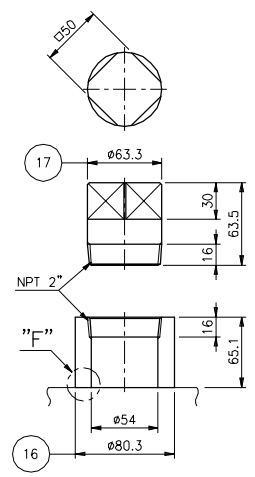

DETAIL OF COUPLING

NOTES

1. ALL DIMENSIONS ARE IN mm UNLESS OTHERWISE NOTED.
2. THE BOLT HOLES OF FLANGES SHALL STRADDLE THE VESSEL N. S. CENTERLINE TO VERTICAL CENTERLINE OF VESSEL AS SHOWN IN FIG-1 UNLESS OTHERWISE SPECIFIED.
3. EACH REINF. PAD SHALL HAVE A TELL TALE HOLE LOCATED AS FOLLOWS: REF. TO FIG-2
   1) FOR NOZZLES ATTACHED AT HEAD, THE FARTHEST FROM HEAD, CENTERLINE : (FOR NOZZLES AT HEAD CENTER : 180° DIRECTION)
   2) FOR NOZZLES ATTACHED AT SHELL, LOWER POINT OF THE VESSEL.

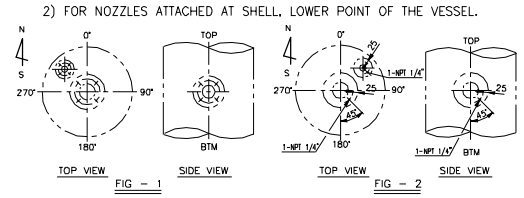

4. GASKET MATERIAL (SPIRAL WOUND t4.5)
   1) FILLER : PTFE
   2) HOOP : ALLOY N06625
   3) INNER RING : ALLOY N06625
   4) OUTER RING : ALLOY N06625

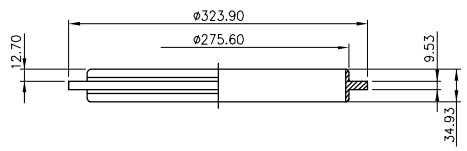

18 DETAIL OF SEAL RING

ITEM	NAME OF PART / PART CODE	MATERIAL	Q'TY / Q'TY FOR 1 SET	SPARE	UNIT	REMARKS
18	SEAL RING(106)	INCONEL 625	2	2	EA	SEE DWG.
17	PLUG	SA105	2		EA	ø63.3 (NPT 2")
16	COUPLING	SA105	2		EA	ø80.3 (NPT 2" ASME 6000#)
15	STUD B/HEAVY HEX. 2NS	SA320-B7/SA194-Gr.4	8	4	SETS	U2-8UN x 470L
14	G-LOK CLAMP(X12M)	AISI 4140	2	1	EA	SEE DWG.
13	FLANGE	SB 564 UNS.N06625 Gr.1	1		EA	2" ASME 300# LWN.RF
12	STUD B/HEAVY HEX. 2NS	SA193-B7/SA194-2H	8	2+2	SETS	U5/8-11UN x 95L
11	GASKET	SEE NOTE 4.	2	2+2	EA	t4.5x2" ASME 150# R.F
10	BLIND FLANGE	SB 564 UNS.N06625 Gr.1	2		EA	2" ASME 150# BL'D.RF
9	FLANGE	SB 564 UNS.N06625 Gr.1	2		EA	2" ASME 150# LWN.RF
8	FORGED NECK	SB 564 UNS.N06625 Gr.1	2		EA	ø220
7	FLANGE	SB 564 UNS.N06625 Gr.1	2		EA	6" ASME 300# WN.RF-S/40
6	REINF. PAD	SB 443 UNS.N06625 Gr.1	2		EA	t6.35
5	NOZZLE NECK PLATE	SB 443 UNS.N06625 Gr.1	2		EA	t5
4	FLANGE	SB 564 UNS.N06625 Gr.1	2		EA	12" ASME 150# WN.RF-t5
3	HYDROTEST COVER	SA105	2		EA	SEE DWG.
2	MATING HUB FLANGE	SB 564 UNS.N06625 Gr.1	2		EA	SEE DWG.
1	FLANGE	SA350 LF2 + WELD DEPO.	2		EA	12" ASME 900# G-LOK

Rev	Date	BY	Checked	Approved	Approved	Approved	DESCRIPTION
			HANIL		COMPANY		
04	09.10.'10	CORE-S.M.	J.C.KIM	H.KANG			FIANL
03	03.19'10	CORE-S.M.	J.C.KIM	H.KANG			APPROVAL FOR CONSTRUCTION
02	03.08.'10	CORE-S.M.	J.C.KIM	H.KANG			ISSUED FOR APPROVAL
01	02.17.'10	CORE-S.M.	J.C.KIM	H.KANG			ISSUED FOR APPROVAL
00	10.16.'09	CORE-S.M.	J.C.KIM	H.KANG			ISSUED FOR COMMENT

PARS OIL & GAS COMPANY
SOUTH PARS GAS FIELD DEVELOPMENT
PHASE-1 REVAMPING PROJECT

P.O.G.C.

SCALE: N/A

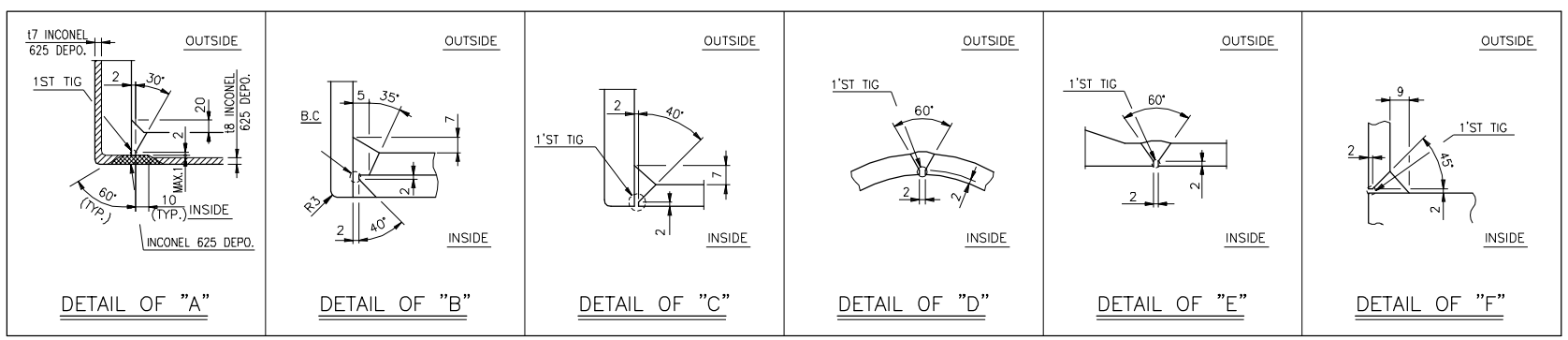

FINAL

TITLE: 3E-0311A/B 3E-0321A/B GAS COOLERS DETAIL OF NOZZLES

DRAWING No.:	PROJ No.	Fac.	Area	Dis.	Doc.	Seq.	Rev.	Sheet No.
SP1-225-SPP1-00-VE-DL-006-901-04	SP1-225	SPP1	00	VE	DL	006	04	7/7

CAD FILENAME:

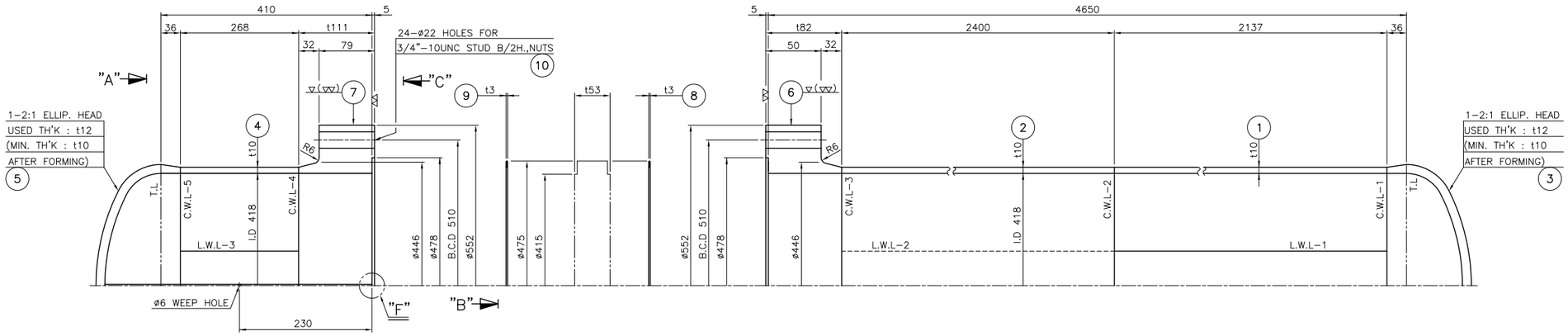

BODY SEAM PLAN

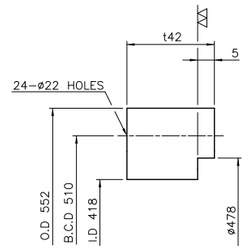

16 TEST RING

FINAL

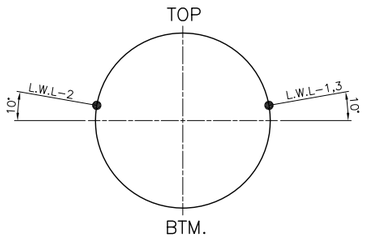

VIEW "A"

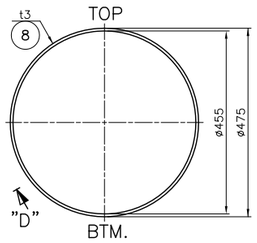

GASKET
(SEE NOTE "1")

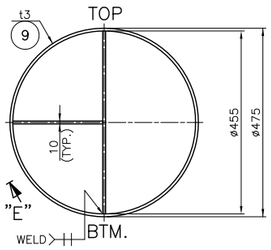

GASKET (VIEW "B")
(SEE NOTE "2")

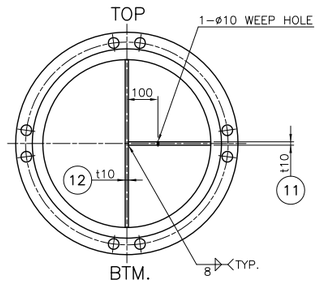

VIEW "C"

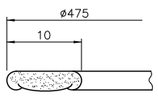

SECTION "D"

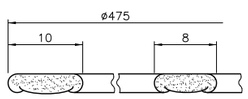

SECTION "E"

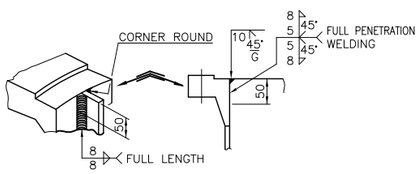

DETAIL OF "F"

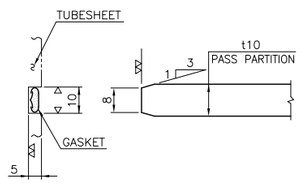

GASKET SEATING

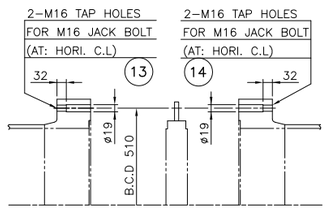

JACK BOLT HOLE DETAIL

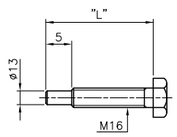

No.	"L"
13	130
14	105

JACK BOLT DETAIL

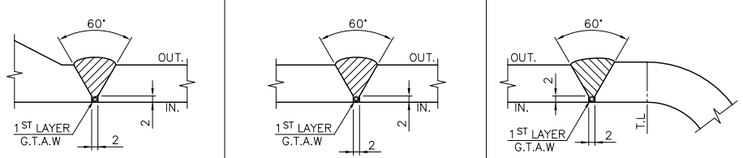

C.W.L-3,4	C.W.L-2 & L.W.L-1~3	C.W.L-1,5

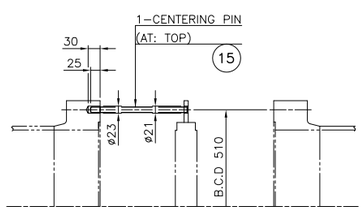

CENTERING PIN HOLE DETAIL

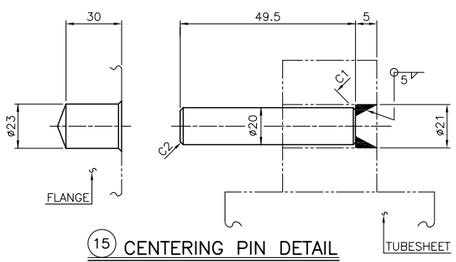

15 CENTERING PIN DETAIL

NOTES

1. GASKET MATERIAL : DOUBLE METAL JACKET
   - FILLER : GRAPHITE
   - JACKET : 304 S.S
2. GASKET MATERIAL : DOUBLE METAL JACKET
   - FILLER : GRAPHITE
   - JACKET : MONEL
   - RIB : DOUBLE METAL JACKETED GRAPHITE FILLED (MONEL)

ITEM	NAME OF PART / PART CODE	MATERIAL	NO. REQ'D	SPARE	UNIT	REMARK
16	TEST RING	SA266-4	1			t42
15	CENTERING PIN	SA36	1			ø20
14	JACK BOLT	304 S.S	2			M12 x P1.25
13	JACK BOLT	304 S.S	2			M12 x P1.25
12	PASS PARTITION PLATE	SB171-C70600	1			t10
11	PASS PARTITION PLATE	SB171-C70600	1			t10
10	STUD B/2H.,NUTS	SA193-B7/SA194-2H	24	4	SETS	3/4"-10UNC x L230
9	GASKET	SEE NOTE "2"	1	2		t3
8	GASKET	SEE NOTE "1"	1	2		t3
7	CHANNEL FLANGE	SB171-C70600	1			t111
6	SHELL FLANGE	SA266-4	1			t82
5	CHANNEL HEAD	SB171-C70600	1			t12 (2:1 ELLIP.)
4	CHANNEL SHELL	SB171-C70600	1			t10
3	SHELL HEAD	SA516-70	1			t12 (2:1 ELLIP.)
2	SHELL	SA516-70	1			t10
1	SHELL	SA516-70	1			t10

REV.	DATE	DESCRIPTION	PRE'D	CHK'D	APP'D	AUT'D
04	Sep.10.2010	ISSUE FOR CONSTRUCTION	J.G.PARK	N.H.KWON	J.C.KIM	H.KANG
03	MAY.28.2010	ISSUE FOR CONSTRUCTION	J.G.PARK	N.H.KWON	J.C.KIM	H.KANG
02	MAY.13.2010	ISSUE FOR COMMENT	J.G.PARK	N.H.KWON	J.C.KIM	H.KANG
01	APR.29.2010	ISSUE FOR COMMENT	J.G.PARK	N.H.KWON	J.C.KIM	H.KANG
00	JAN.16.2010	ISSUE FOR COMMENT	J.K.AN	N.H.KWON	J.C.KIM	H.KANG

PARS OIL & GAS COMPANY
SOUTH PARS GAS FIELD DEVELOPMENT
PHASE - 1
P.O.G.C

I.G.C. Petropars Ltd

HANIL HEAVY INDUSTRIES CO., LTD.
HEAT TRANSFER & EQUIPMENTS BUSAN, KOREA

DRAWING TITLE: 3-E-1113
GLYCOL COOLER
DETAIL OF BODY (1/2)
REQ'D NO. 1 SET

PURCHASER JOB No.: -
JOB No.: -

VENDOR DRAWING No.: VP-3-E-1113-003

SCALE	PURCHASER DRAWING No.	SHEET	SIZE	Rev.
N/S	SPP1-225-SPP1-00-VE-DL-003-902-04	1 OF 1	A3	04

THE DESIGN OR PART THEREOF CONTAINED IN THIS DOCUMENT WAS DEVELOPED FOR SK FOR THE PROJECT AND REMAINS THE PROPERTY OF SK. ALL FLUOR PROPRIETARY INFORMATION OR UNDERLYING INTELLECTUAL PROPERTY UTILIZED IN THE CREATION OF THE DESIGN CONTAINED HEREIN SHALL REMAIN THE PROPERTY OF DAELIM.

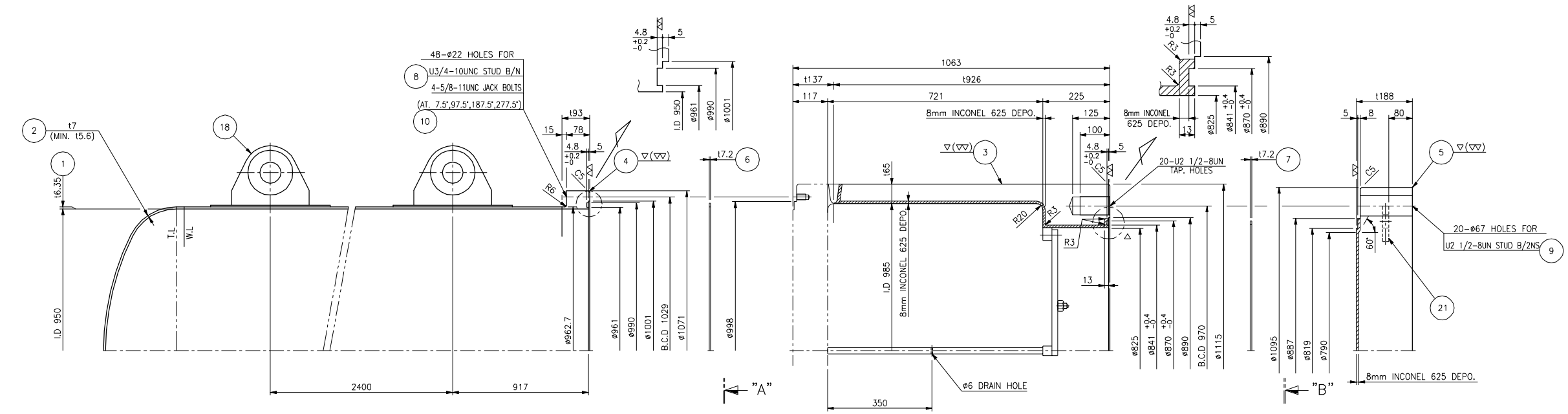

DETAIL OF BODY FLANGE

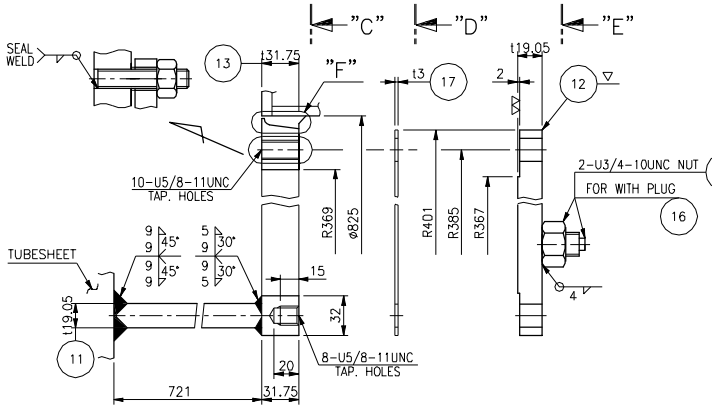

DETAIL OF PARTITION BOX COVER

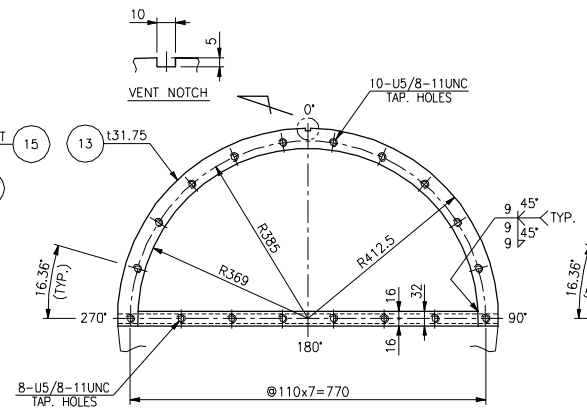

DETAIL OF "C"
(FOR PARTITION BOX FLANGE)

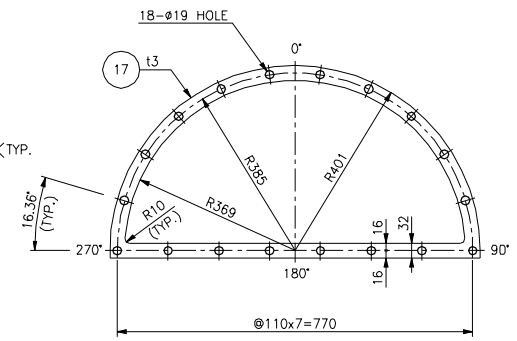

DETAIL OF "D"
(FOR PARTITION BOX GASKET)

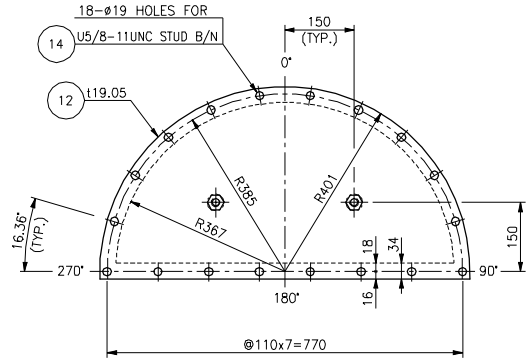

DETAIL OF "E"
(FOR PARTITION BOX COVER)

FINAL

NOTE

1. GASKET MAT'L : SPIRAL WOUND GASKET (ALLOY N06625)+PTFE FILLED
2. GASKET MAT'L : METAL JACKET (ALLOY N06625)+PTFE FILLED

ITEM	NAME OF PART / PART CODE	MATERIAL	Q'TY / Q'TY FOR 1 SET	SPARE	UNIT	REMARKS
21	LIFTING LUG	SA516-70N	2		EA	t20
20	REINF. PAD	SB 443 UNS.N06625 Gr.1	2		EA	t6.35
19	LIFTING LUG	SA516-70N	4		EA	t13
18	LIFTING LUG	SA516-70N	2		EA	t20
17	GASKET	SEE NOTE 2.	1	1+1	EA	t3
16	PLUG	INCONEL ALLOY UNS.N06625	2		EA	U3/4-10UNC
15	NUTS	INCONEL ALLOY UNS.N06625	2		EA	U3/4-10UNC
14	STUD B/N	INCONEL ALLOY UNS.N06625	18	2+2	SETS	U5/8-11UNC x 65L
13	PASS PARTITION BOX FLANGE	SB 443 UNS.N06625 Gr.1	1		EA	t31.75
12	PASS PARTITION BOX COVER	SB 443 UNS.N06625 Gr.1	1		EA	t19.05
11	PASS PARTITION PLATE	SB 443 UNS.N06625 Gr.1	1		EA	t19.05
10	JACK BOLT	SA193-B8M CL.1	4		EA	U5/8-11UNC x 125L
9	STUD B/2NS	SA193-B7/SA194-2H PTFE COATED+PHOSPHATED	20	2+2	SETS	U2 1/2-8UN x 425L
8	STUD B/N	SA193-B7/SA194-2H PTFE COATED+PHOSPHATED	48	5+5	SETS	U3/4-10UNC x 140L
7	GASKET	SEE NOTE 1.	1	1+1	EA	t7.2
6	GASKET	SEE NOTE 1.	1	1+1	EA	t7.2
5	CHANNEL COVER	SA 765 Gr.2 + INCONEL 625(N06625) DEPO.(NOTE-24)	1		EA	t188
4	SHELL FLANGE	SB 564 UNS.N06625 Gr.1	1		EA	t93
3	CHANNEL BARREL	SA 765 Gr.2 + INCONEL 625(N06625) DEPO.(NOTE-24)	1		EA	ø1115
2	SHELL HEAD	SB 443 UNS.N06625 Gr.1	1		EA	t7 (2:1 ELLIP.)
1	SHELL	SB 443 UNS.N06625 Gr.1	1		EA	t6.35

Rev	Date	BY	Checked	Approved	Approved	Approved	DESCRIPTION
05	09.10.'10	CORE-S.M.	J.C.KIM	H.KANG			FINAL
04	04.12'10	CORE-S.M.	J.C.KIM	H.KANG			APPROVAL FOR CONSTRUCTION
03	03.19'10	CORE-S.M.	J.C.KIM	H.KANG			APPROVAL FOR CONSTRUCTION
02	03.08.'10	CORE-S.M.	J.C.KIM	H.KANG			ISSUED FOR APPROVAL
01	02.17.'10	CORE-S.M.	J.C.KIM	H.KANG			ISSUED FOR APPROVAL
00	10.16.'09	CORE-S.M.	J.C.KIM	H.KANG			ISSUED FOR COMMENT
		HANIL			COMPANY		

PARS OIL & GAS COMPANY
SOUTH PARS GAS FIELD DEVELOPMENT
PHASE-1 REVAMPING PROJECT

P.O.G.C.

SCALE: N/A

TITLE:
3E-0311A/B
3E-0321A/B
GAS COOLERS GENERAL NOTE

KMC I.G.C. HANIL

DRAWING No.:	PROJ No.	Fac.	Area	Dis.	Doc.	Seq.	Rev.	Sheet No.
SP1-225-SPP1-00-VE-DL-003-901-05	SP1-225	SPP1	00	VE	DL	003	05	3/7

CAD FILENAME.

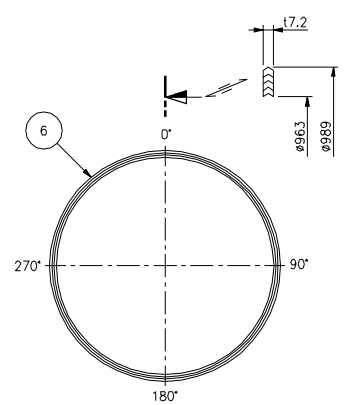

VIEW "A"

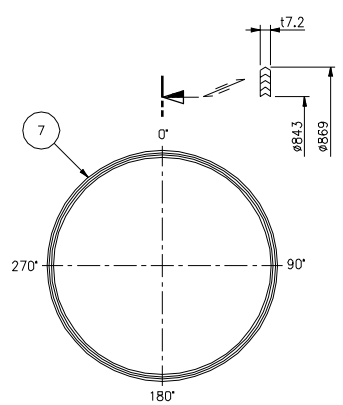

VIEW "B"

DETAIL OF GASKET

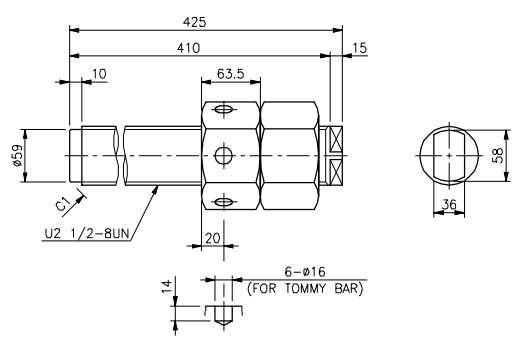

DETAIL OF STUD B/2NS (9)

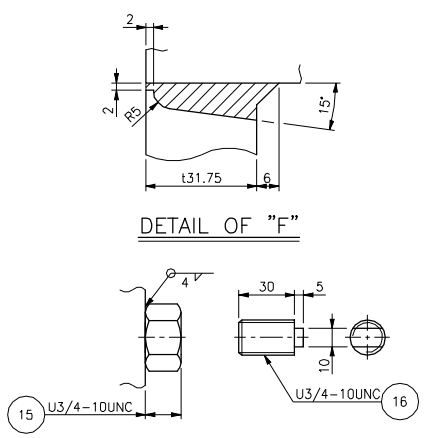

DETAIL OF "F"

DETAIL OF NUT & PLUG
(FOR PARTITION BOX COVER SIDE)

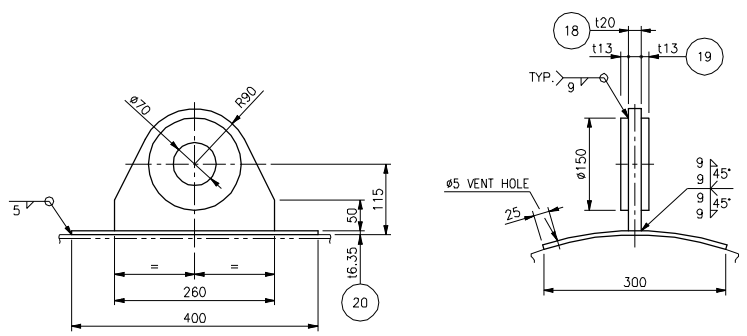

DETAIL OF LIFTING LUG
(FOR SHELL SIDE)

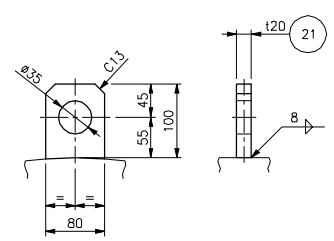

DETAIL OF LIFTING LUG
(FOR CHANNEL COVER SIDE)

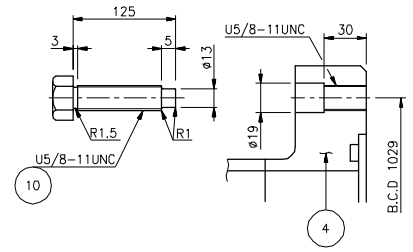

DETAIL OF JACK BOLT