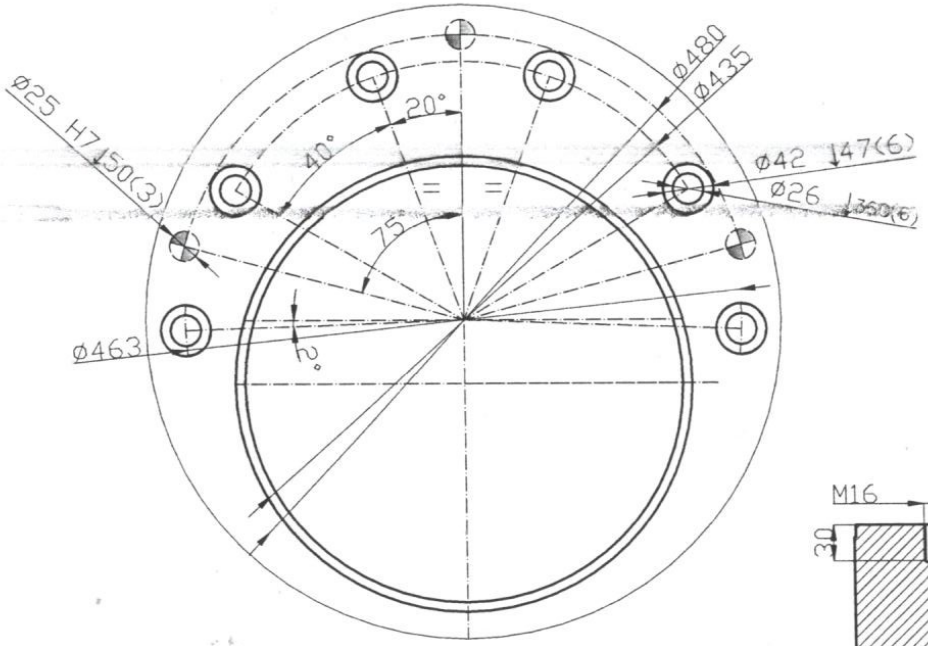

DETAIL VIEW

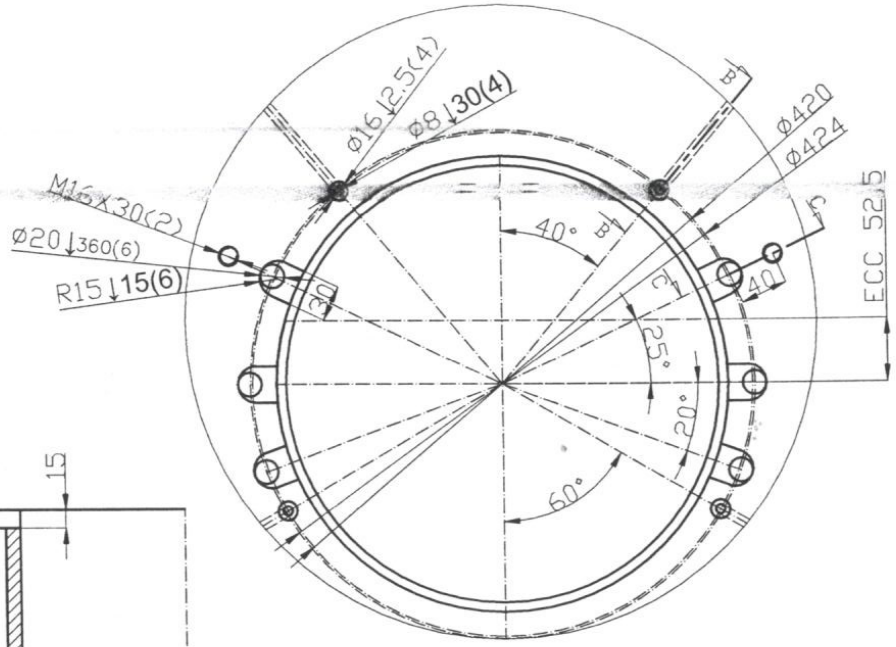

DETAIL VIEW

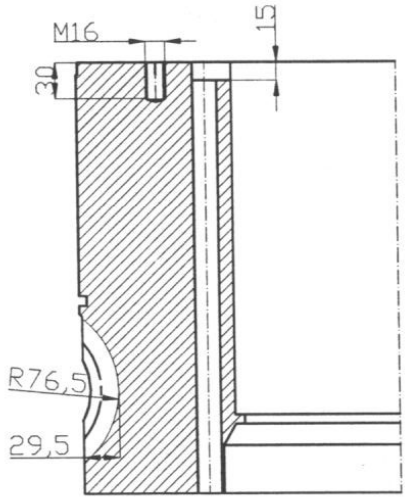

SEC:C-C

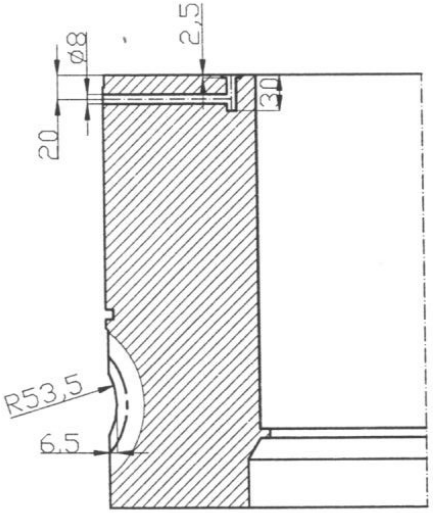

SEC:B-B

GOST		▽2	▽3	▽4	▽5	▽6	▽7	▽9
DIN								
		25	12.5	6.3	3.2	1.6	0.8	0.2
Ra	100	40	20	10	5	2.5	1.25	0.32
Rz	630	160	80	40	20	10	6.3	1.6

12 (6.4 3.2 1.6)

REV.	DESCRIPTION	DATE	DRAWN

AZARBAIJAN STEEL CO

	DATE	NAME
DRAWN	99/8/15	A.JAVADI
CHECKED		H.FAGHIHI
APPROVED		F.MOBAYEN
AZBUILT		
--		
AS.NUMBER	8.049722.K	

SCALE: 1:1 | WEIGHT: 280

MATERIAL: -- CK45

DESCRIPTION:

TITLE: WHEEL FOR WORM SCREV

SIZE: A0

DRAW NO: AZ-4.265671.H

REV: 00

HEAT TREATMENT

SHEET: 2/2 | PART:-