TOLERANCE CLASS	FROM (0.5-3)	FROM (3-6)	FROM (6-30)	FROM (30-120)	FROM (120-400)	FROM (400-1000)	FROM (1000-2000)	FROM (2000-4000)	FROM (4000-8000)	FROM (8000-12000)	FROM (12000-16000)	FROM (16000-20000)
f	±0.05	±0.05	±0.1	±0.15	±0.2	±0.3	±0.5	±0.8	±3	±4	±5	±6
m	±0.1	±0.1	±0.2	±0.3	±0.5	±0.8	±1.2	±2	±3	±6	±7	±8
c	±0.15	±0.2	±0.5	±0.8	±1.2	±2	±3	±4	±5	±10	±12	±12
v	-	±0.5	±1	±1.5	±2	±3	±4	±6	±8			

DIN7168

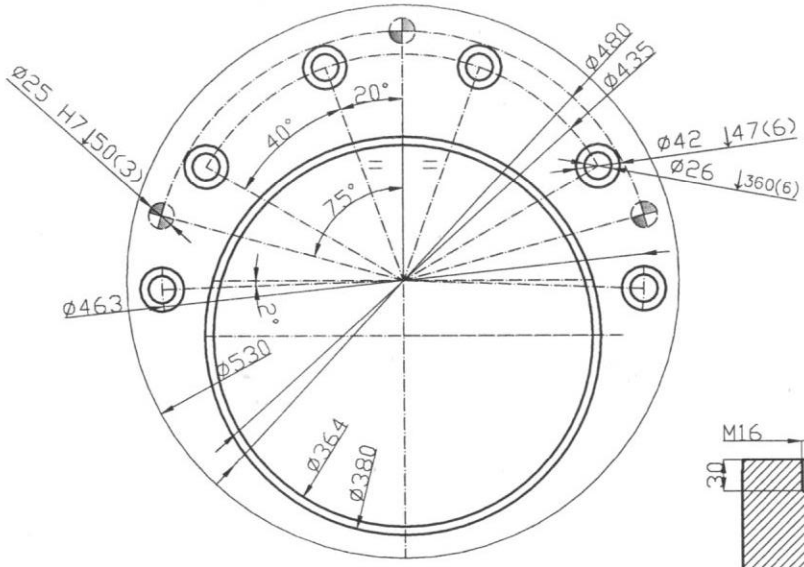

DETAIL VIEW

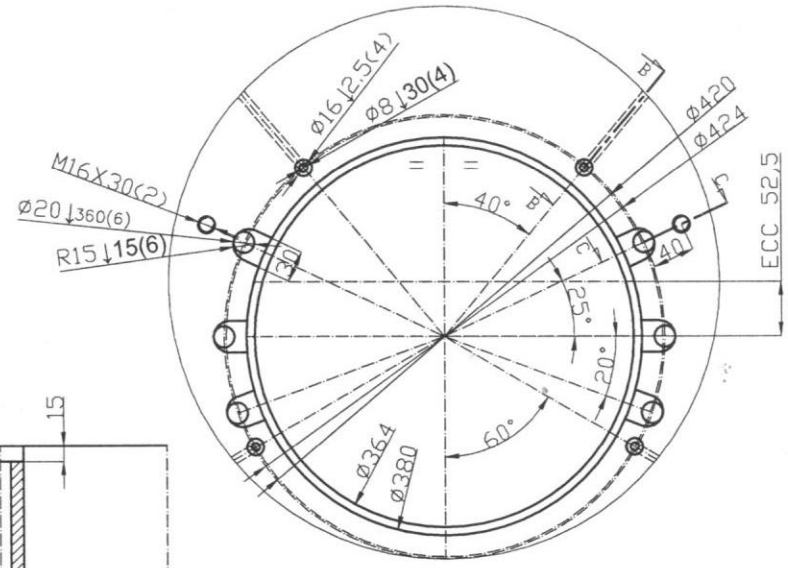

DETAIL VIEW

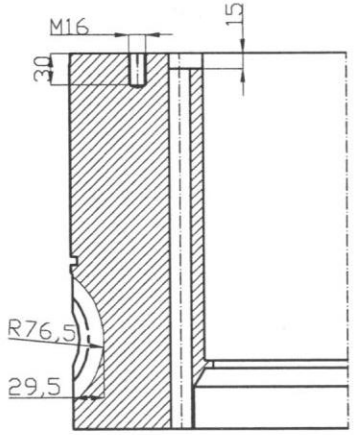

SEC:C-C

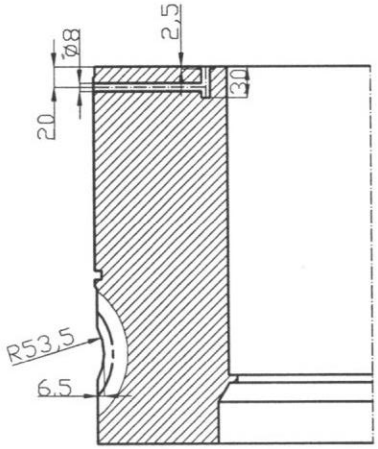

SEC:B-B

نقشه شماتیک بوده و نمونه جهت ساخت دقیق ارسال میگردد

GOST		▽2	▽3	▽4	▽5	▽6	▽7	▽9
DIN		▽			▽▽		▽▽▽	▽▽▽▽
	✓	25 ✓	12.5 ✓	6.3 ✓	3.2 ✓	1.6 ✓	0.8 ✓	0.2 ✓
Ra	100	40	20	10	5	2.5	1.25	0.32
Rz	630	160	80	40	20	10	6.3	1.6

REV.	DESCRIPTION	DATE	DRAWN

AZARBAIJAN STEEL CO

	DATE	NAME
DRAWN	99/8/15	A.JAVADI
CHECKED		H.FAGHIHI
APPROVED		F.MOBAYEN
AZBUILT		
--		
AS.NUMBER	8.049722.K	

SCALE: 1:1 | WEIGHT: 280

MATERIAL: 1.6513

DESCRIPTION:

TITLE: WHEEL FOR WORM SCREV

SIZE: A0

DRAW NO: AZ-4.265671.H

REV: 00

HEAT TREATMENT: 30 HRC

SHEET: 2/2 | PART:-